

Thermo Shaker

Model TR-100 G Cod. 5109100

INSTRUCTIONS MANUAL

Foreword

Thank you for purchasing our Products: MultiTherm Shaker for Microtubes. This Manual for users contains function and operation of the Instrument. In order to use the instrument properly, please read this manual carefully before using the Instrument. Keep it for later use when you meet with difficulties.

Opening Check

Please check the Instrument and Appendix with the packing list when you first open the instrument packing case. If you find there is something wrong with the Instrument and the Appendix, do contact the vendor or the producer.

Safety Warnings and Guidelines

1. Important operation information of the security:

Before the users' operation, they should have a perfect conception of how to use the Instrument. Therefore, read this Manual carefully before using it.



Operation before reading the Manual is forbidden. Read the guidelines and directions below and carry out the countermeasure according to them.

2. Security:

The operation, maintenance and repair of the Instrument should comply with the basic guidelines and the remarked warning below. If you don't comply with them, it will have effect on the scheduled using life of the Instrument and the protection provided.



This product is a normal and an indoor Instrument.



Read the Manual carefully before operation, the expert of wiring equipment can operate this Instrument.



The operator should not open or repair the Instrument by himself, which will result in losing the qualification of repair guarantee or occurring accident. If there is some wrong with the Instrument, the company will repair it.



A.C. power's grounding should be reliable to safeguard against an electric shock. The 3-pin plug supplied with thermo-shaker's power cable is a safety device that should be matched with a suitable grounded socket.



During the normal operation, the temperature of metal block will be very high. There will be scald or boiling of the liquid. Therefore strictly prohibit any part of the body to touch the Instrument from scald.



Close the test tube lids before put the test tubes into the block. Liquids maybe spill in the block or onto the device if tube lids opened, that will damage the block or the device.

Before power on, guarantee the voltage used should be accordant to the voltage needed, and the rated load of electrical outlet should not lower than the demand. If the electric line is damaged, you should replace it with the same type. You should assure there's nothing on the electric line and you should not put the electric line in the ambulatory place. Hold the jack when you pull out the electric line, and don't pull the electric line.

The Instrument should be put in the place of low temperature, little dust, no water and no sun or strong lamp. What's more, the place should be good aeration, no corrosively gas or strong disturbing magnetic field, far away from central heating, camp stove and other hot resource. Don't put the Instrument in wet and dusty place. The vent on the Instrument is designed for aeration. Don't wall up or cover the vent in order to keep from high temperature. If you use the more than one Instrument the same time, the distance between them should be more than 100cm.

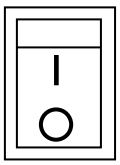

Mains switch is on the rear of the device, push "I" to power on the device, and push "O" to power off the device.

Power off when you finish your work. Pull off the connector plug when there's long time no use of the Instrument and cover it with a cloth or plastic paper to prevent from dust.

Pull the connector plug from the jack at once in the following case, and contact the vendor:

- **There is some liquid flowing into the Instrument;**
- **Drenched or fire burned.**
- **Abnormal operation: such as abnormal sound or smell.**
- **Instrument dropping or outer shell damaged.**
- **The function has obviously changed.**

3. The maintenance of Instrument

The well in the block should be cleaned by the cloth stained with alcohol to assure good heat translation between the block and the test tube and no pollution. If there are smutches on the Instrument, clean them with cloth.

Power off when cleaning the Instrument.
When cleaning the well, don't drop the cleaning liquid in the well.
Corrosive cleaning liquid is strongly prohibited.

Contents

Chapter 1 Introduction----------1

Chapter 2 Specifications----------2

1 The normal operating condition----------2

2 The basic parameters and performance----------2

Chapter 3 Preparations----------3

1 Structure Description----------3

2 Keyboard and Display panel----------4

3 Key Functions----------5

Chapter 4 Operation Guide----------6

1 Single Temperature, Speed and Time setting----------6

2 How to Shut Off the Temperature Speed and Timing---------- 7

3 Short Mix----------7

4 Temperature Calibration----------8

5 Exchange of Block----------11

Chapter 5 Failure analysis and troubleshooting----------12

Annex 1 Wiring Diagram of TR-100-G Thermo Shaker----------13

Chapter 1 Introduction

The Thermo shaker for Micro-tubes is an ideal instrument for intensive mixing of samples in the regulated temperature conditions.

Mixing and heating modes can be used both simultaneously and independently i.e., the device can work as shaker and as a thermostat. The main body of the Mixing Block can be used with different kinds of blocks. TR-100-G is applicable for DNA analysis, extraction of lipids and other cell components, DNA library creation, PCR amplification, pre-denaturation in electrophoresis, serum solidification etc.

Features of this product as follows:

1. **As it is equipped with various optional mixing blocks, the instrument can adapt to different tubes & wells to cope with experimental needs. It is easy to replace the metal blocks and is very simple to clean and sterilize. Customized blocks are available to suit your specific demands**
2. **LCD display. It Easy to setup and use**
3. **Simultaneous display of set and actual time, temperature and speed**
4. **Over heating protection device ensures safety & reliability**
5. **Temperature can be calibrated to meet user's needs**
6. **Beep-signal / Stop after program completion**

Chapter 2 Specifications

1. The normal operating condition

Ambient temperature: 5℃ ～35℃

The relative humidity: ≤70%

2. The basic parameters and performance

Model / Parameter	TR-100-G	
Mixing rate	200~1500 rpm	
Orbit	2mm	
Temperature setting range	0℃-100℃	
Timing range	1min ~ 99h59min	
Accuracy of the temperature	≤0.5℃	
Heating time（RT25℃）	≤12min （From 40℃ TO 100℃）	
Standard Block	A-BLOCK: 96x0.2 ml G-BLOCK:12x15ml Falcon B-BLOCK: 54 x 0.5ml H-BLOCK: 6x50ml Falcon C-BLOCK: 35 x 1.5ml J-BLOCK:96x0.2ml Micro-plate D-BLOCK: 35 x 2.0ml E-BLOCK: 20 x 1.5ml + 15 x 0.5ml F-BLOCK:24x ≤Φ12mm Tube	
Power Supply	AC100-120V～ 50-60Hz	AC200-240V～ 50-60Hz
Fuse	250V 4.0A Φ5×20	250V 3.0A Φ5×20
Dimension (mm)	300(D)×220(W)×195(H)	
Net weight (kg)	7.0	

Chapter 3 Preparations

This chapter is introduces Thermo Shaker's mechanical structure, the keyboard and each key's functions and some preparations before power-on. You should be familiar with this chapter before the Thermo Shaker is first operated。

1. Structure Description

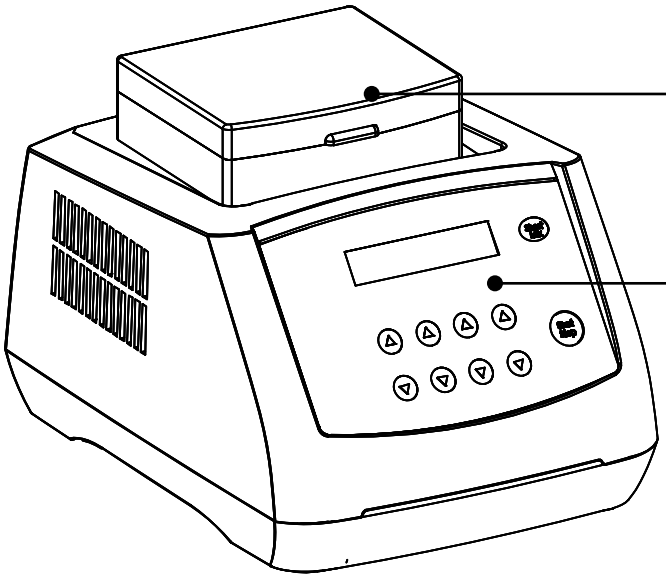

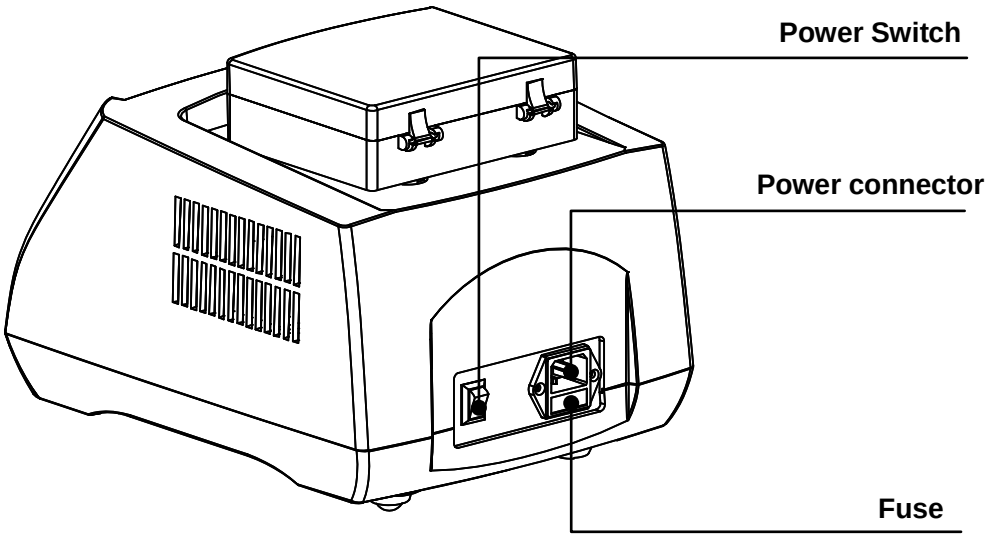

2. Keyboard and Display panel



Display Panel：

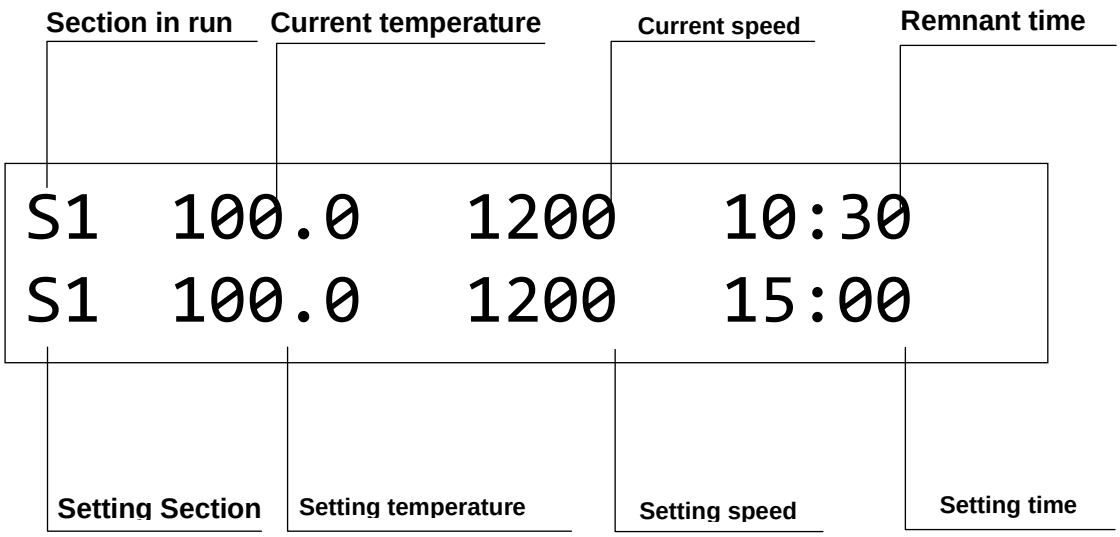

3. Key Functions

Seg. ▲ ▼ To select procedure Section: five Section points as S1,S2,S3,S4,S5.

Temp. ▲ ▼ Temperature setting key. Pressing“△”or“▽”to set running temperature , To set temperature though pressing “△”or“▽”continuously, which is more fast and conveniently.

Speed ▲ ▼ Speed setting key. Pressing“△”or“▽”to set mixing speed，To set mixing speed though pressing “△”or“▽”continuously, which is more fast and conveniently. Each time the key is pressed , the mix speed changes by 10rpm.

Time ▲ ▼ Timing setting key. Pressing“△”or“▽”to set timing hours，To set timing hours though pressing “△”or“▽”continuously, which is more fast and conveniently.

Short Mix The device mixes at the frequency visible in the display for as long as the “Short Mix” key is held down. The time is counted in seconds until 999S has expired.

Start/Stop Stop/start key. Pressing this key to stop or start the procedure. Pressing momentary to start, Pressing continuously to stop.

Chapter 4 Operation Guide

1. Single temperature, speed and timing setting

a) **The LCD will display the picture as the chart when the instrument powers on and the instrument goes into the initial state with the sound of "du…".**

b) **About 6 seconds,the display window for practical temperature shows 30.0, which is the practical temperature of the block. Setting temperature shows 37.0, which is the establishment temperature. While 10:00 is the former timing time, and S1 is the former temperature section. The temperature unit is "℃", speed unit is "RPM" and the time unit is "hour:minute".**

c) **Pressing Temp's "△"or"▽", the value of display windows for setting temperature will increase or reduce from decimal digit, unit digit, tens digit to hundreds digit.**

Pressing Speed or Time's "△"or"▽", to set mix speed or timing time according to the same transformation rule above.

Besides, pressing "△"or"▽" for 2 seconds continuously to amend the digit from decimal to unit ,from unit to tens digit ,from tens digit to hundreds digit quickly.

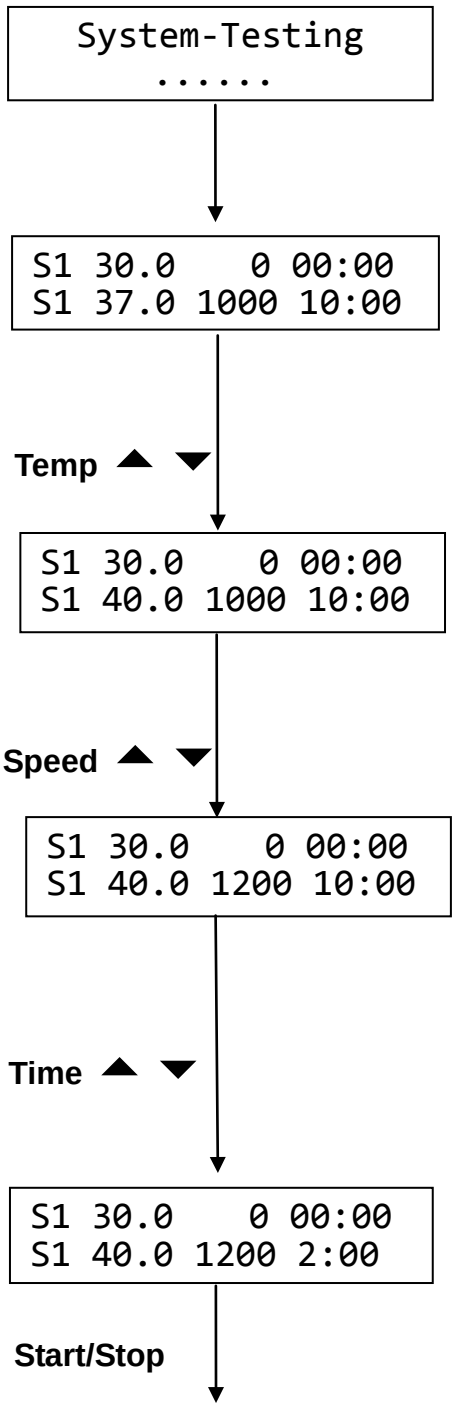

Start single temperature procedure

If you want to set temperature to 40.0 ℃, mix speed to 1200 rpm ,timing time to 2 hour, pressing temp's "△" continuously to let the temperature reach 40.0, it will be confirmed and stored at once. Press Speed's "△" continuously to let the mix speed reach 1200rpm ,Meanwhile pressing time's "▽" continuously to let the timing time reach 02:00, it will be confirmed and stored at once too. After finishing setting program S1, pressing "stop/start" key to run S1 program.

Heating begins after

Start/Stop has been pressed or one of the Temp. curor keys has been pressed.

d) Pressing seg.'s"△"or"▽" to select one section of S1，S2，S3，S4，S5. Then set the values of temperature, speed and time according to step (C).

You can set these five points as usual segment point, whenever you want to use,you can transfer one of them.

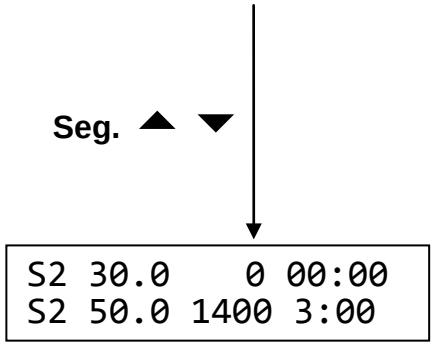

2. How to shut off the temperature, speed and timing function

a) Press Seg's"△"or"▽" key to Select one section of the S1,S2,S3,S4,S5.

b) Press Temp's "▽" key , the lowest value displayes "OFF" , and the device remeans at room temperature. Also press Speed or Time's "▽" key, the lowest value displayes "OFF", Speed displayes "OFF", it means no mixing function. Time displayes "OFF" , it means no timing function, timing time is ∞, if start/stop key is pressed, it will display "CON" with flickering .

3. Short Mix

The device mixes at the frequency visible in the display for as long as the "Short Mix" key is held down. The time is counted in seconds until 999 seconds has expired.

The max. Short Mix speed can be set according to your requirement at the current section.

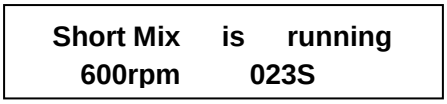

4. Temperature calibration

The temperature of the Instrument has been adjusted before it is sold out. But if there is deviation between the actual temperature and the displayed temperature due to some reasons, you can do as follows to correct the error.

Notes: The Instrument uses two temperatures adjustment to ensure its veracity. This means it is linearly adjusted on 40°C and 100℃ two points. The temperature veracity will be within ±0.5°C after the double temperature adjustment.

Both the circumstances and the block temperature should be lower than 30℃.

Adjustment methods as follows:

a) After the startup of the Instrument, it enters waiting interface. Make sure the temperature in display is below 30℃. If the temperature is higher than 30℃, you should wait until the temperature is below 30℃.

b) Inject olefin oil into one of the cone-shaped wells, and then put a thermometer into this well (Make sure the precision of the thermometer should be within 0.1 ℃ and the temperature ball should be absolutely immerged into the cone-shaped well). Heat insulation material is needed on the block to separate it from the circumstance. Seeing from Fig a.:

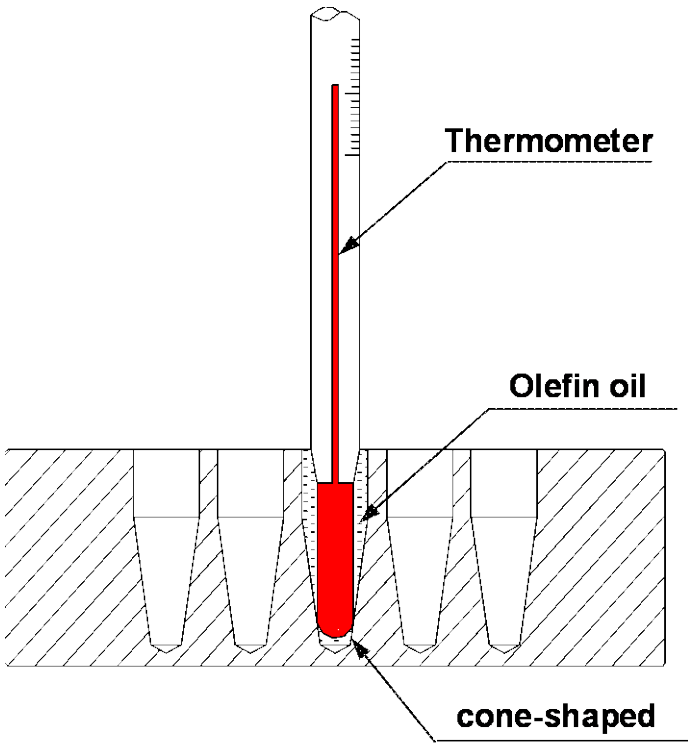

Fig a

Notes: Please read the actual value after 20minutes' constant temperature to ensure the adjustment precision.

c) **Pressing Seg's"△"and"▽"simultaneously, practical temperature shows 20.5, and rise to 40.0 at once,at the same time the sign "＊" flicker ceaselessly. When the practical temperature reach 40.0, the sign "ADJ" and "＊" flicker ceaselessly together**

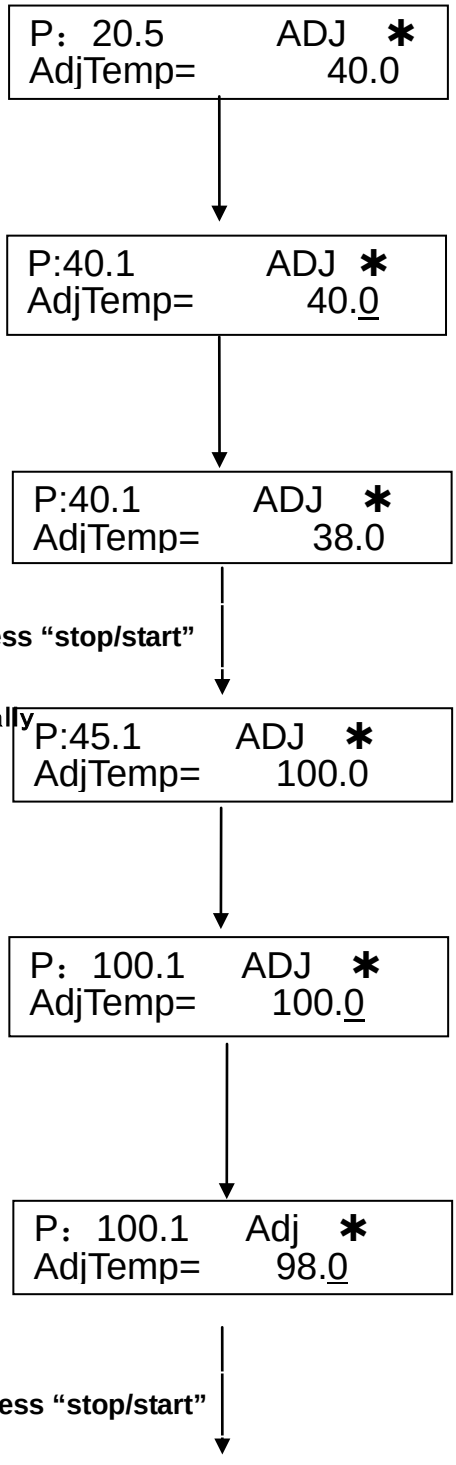

d) **After 20 mintues，the actual temperature of Thermometer is 38.0℃Pressing temp's"△"or "▽"key ,amend the value of "Adjtemp" to reach 38.0, then pressing "stop/start"key to confirm.**

Then rise to 100.0 ℃and automatically flicker ceaselessly.

e) **When the practical temperature reach 100.0, the sign "ADJ" and "＊" flicker ceaselessly together**.

f) **After 20 mintues，the actual temperature of Thermometer is 98.0℃Pressing temp's"△"or "▽"key ,amend the value of "Adjtemp" to reach 98.0. then pressing "stop/start"key to confirm.**

After Temperature calibration, the temperature displayed is the same with the practical temperature of block.

```
S1  30.0   0 00:00
S1  50.0 1400 3:00
```

Note!
During Temperature calibration, press Seg.'s "△"and"▽" simultaneously to cancel the calibration. The system keeps the former calibration.

So don't press Seg.'s "△"and"▽" simultaneously unless need calibrate the temperature!

5. Exchange of block

a) **Opens the transparent lid and pull out the four screws which fix the block to the heating board with the screwdriver.**

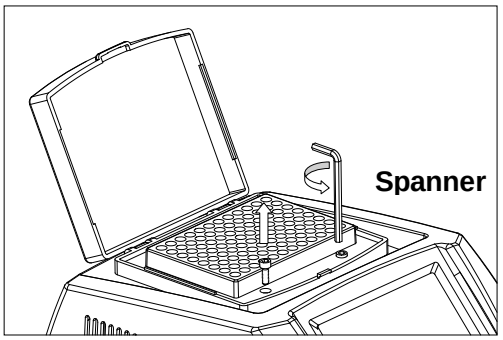

b) **Takes out the screws, closes the lid, puts out the block from the main engine**

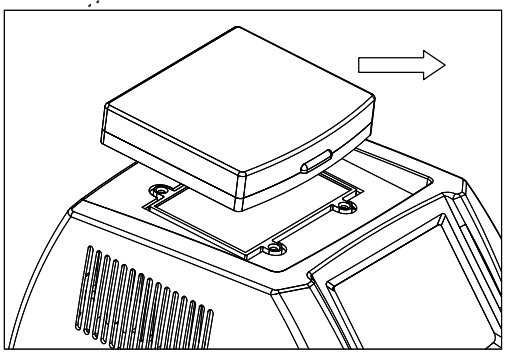

c) **Takes another model block, steadily lays aside on the main engine. The block installment holes aim consistently with the main engine installment holes.**

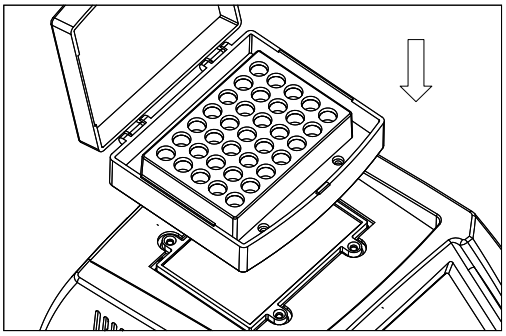

d) **Puts the screws into the installment hole, fixes the metal block on the instrument with the spanner.**

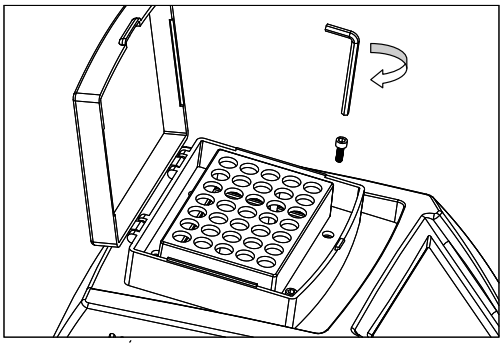

Chapter 5 Failure analysis and troubleshooting

Failure analysis and processing procedures

No.	Phenomenon	Possible Causes	Processing Procedure
1	No signals on the display when it is powered on.	No power	Check the power
		Broken Fuse	Exchange fuse（250V 3.0A 5X20）
		Broken switch	Exchange the switch
		Others	Contact to the seller
2	The actual and displayed temperatures are quite different.	Broken sensor	Contact to the seller
3	“OPEN” in the temperature display with the alarm of “du...”	Temperature sensor are broken or the environmental temperature is below zero	Contact to the seller
4	“SHORT” in the temperature display with the alarm of “du...”	Temperature sensor are broken or the environmental temperature is below zero	Contact to the seller
5	No heating or cooling	Broken sensor or Broken TE module	Contact to the seller
6	Press invalid	Broken film switch	Contact to the seller

Annex 1 Wiring Diagram of TR-100-G Thermo Shaker

(This diagram is just for you reference. If there is any change, excuse for no notice.）

