

Microplate Thermo Shaker

Model TRM-4 Cod. 5109200

INSTRUCTIONS MANUAL

Foreword

Thank you for purchasing our Products: Thermo-shaker for Microplates. This Manual for users contains function and operation of the Instrument. In order to use the instrument properly, please read this manual carefully before using the Instrument. Keep it for later use when you meet with difficulties.

Opening Check

Please check the Instrument and Appendix with the packing list when you first open the instrument packing case. If you find there is something wrong with the Instrument and the Appendix, do contact the vendor or the producer.

Safety Warnings and Guidelines

1. Important operation information of the security:

Before the users' operation, they should have a perfect conception of how to use the Instrument. Therefore, read this Manual carefully before using it.



Operation before reading the Manual is forbidden. Read the guidelines and directions below and carry out the countermeasure according to them.

2. Security:

The operation, maintenance and repair of the Instrument should comply with the basic guidelines and the remarked warning below. If you don't comply with them, it will have effect on the scheduled using life of the Instrument and the protection provided.



This product is a normal and an indoor Instrument.



Read the Manual carefully before operation, The expert of wiring equipment can operate this Instrument.



The operator should not open or repair the Instrument by himself, which will result in losing the qualification of repair guarantee or occur accident. If there is some wrong with the Instrument, the company will repair it.



A.C. power's grounding should be reliable to safeguard against an electric shock. The 3-pin plug supplied with thermo-shaker's power cable is a safety device that should be matched with a suitable grounded socket.



During the normal operation, the temperature of metal block will be very high. There will be scald. Therefore strictly prohibit any part of the body to touch the Instrument from scald.



Close the test tube lids before put the test tubes into the block. Liquids maybe spill in the block or onto the device if tube lids opened, that will damage the block or the device.

Before power on, guarantee the voltage used should be accordant to the voltage needed, and the rated load of electrical outlet should not lower than the demand. If the electric line is damaged, you should replace it with the same type. You should assure there's nothing on the electric line and you should not put the electric line in the ambulatory place. Hold the jack when you pull out the electric line, and don't pull the electric line.

The Instrument should be put in the place of low temperature, little dust, no water and no sun or strong lamp. What's more, the place should be good aeration, no corrosively gas or strong disturbing magnetic field, far away from central heating, camp stove and other hot resource. Don't put the Instrument in wet and dusty place. The vent on the Instrument is designed for aeration. Don't wall up or cover the vent in order to keep from high temperature. If you use the more than one Instrument the same time, the distance between them should be more than 100cm.

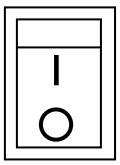

Mains switch is on the rear of the device, push "I" to power on the device, and push "O" to power off the device.

Power off when you finish your work. Pull off the connector plug when there's long time no use of the Instrument and cover it with a cloth or plastic paper to prevent from dust.

Pull the connector plug from the jack at once in the following case, and contact the vendor:

- **There is some liquid flowing into the Instrument;**
- **Drenched or fire burned.**
- **Abnormal operation: such as abnormal sound or smell.**
- **Instrument dropping or outer shell damaged.**
- **The function has obviously changed.**

3. The maintenance of Instrument

The heating plate should be cleaned by the cloth stained with alcohol to assure good heat translation between the heating plate and the microtest plates and no pollution. If there are smutches on the Instrument, clean them with cloth.

Power off when cleaning the Instrument.
When cleaning the heating plate, don't drop the cleaning liquid in the heating plate.
Corrosive cleaning liquid is strongly prohibited.

Contents

Chapter 1 Introduction----------1

Chapter 2 Specifications----------2

1 The normal operating condition----------2

2 The basic parameters and performance----------2

Chapter 3 Preparations----------3

1 Structure Description----------3

2 Keyboard and Display panel----------4

3 Key Functions----------5

Chapter 4 Operation Guide----------6

1 Temperature, Speed and Time set----------6

2 Run, Pause and Stop functions----------7

3 Instantaneous Mixing functions----------7

4 Fix microtest plates ----------8

Chapter 5 Failure analysis and troubleshooting----------9

Annex 1 Wiring Diagram of TRM-4 Thermo Shaker----------10

Chapter 1 Introduction

The Thermo-shaker for Microplates is designed for shaking 2 standard 96-well microplates in the thermostating mode.

Features of this product as follows:

1 Microprocessor controlled time, speed and temperature

2 Simultaneous display of set and actual time, temperature and shaking speed

3 Beep-signal and stop of shaking motion after program completion

4 Heating platform for standard microtest plate

5 Soft start, easy to setup and use

6 Can be adapted for OEM customers

Chapter 2 Specifications

1. The normal operating condition

Ambient temperature: 5℃ ～30℃

The relative humidity: ≤70%

Power supply: AC220V±22V 50Hz±1Hz

2. The basic parameters and performance

Model / Parameter	TRM-4
Mixing rate	100~1500 rpm
Orbit	2mm
Temperature range	RT+5℃~70℃
Timing range	1min ~ 99h59min
Accuracy of the temperature	≤0.5℃
Heating time	≤25min （From room temperature TO 70℃）
Standard Block	4 microtest plates
Dimension (mm)	350(D)×320(W)×185(H)
Net weight (kg)	9.0

Chapter 3 Preparations

This chapter is introduces Thermo Shaker's mechanical structure, the keyboard and each key's functions and some preparations before power-on. You should be familiar with this chapter before the Thermo Shaker is first operated。

1. Structure Description

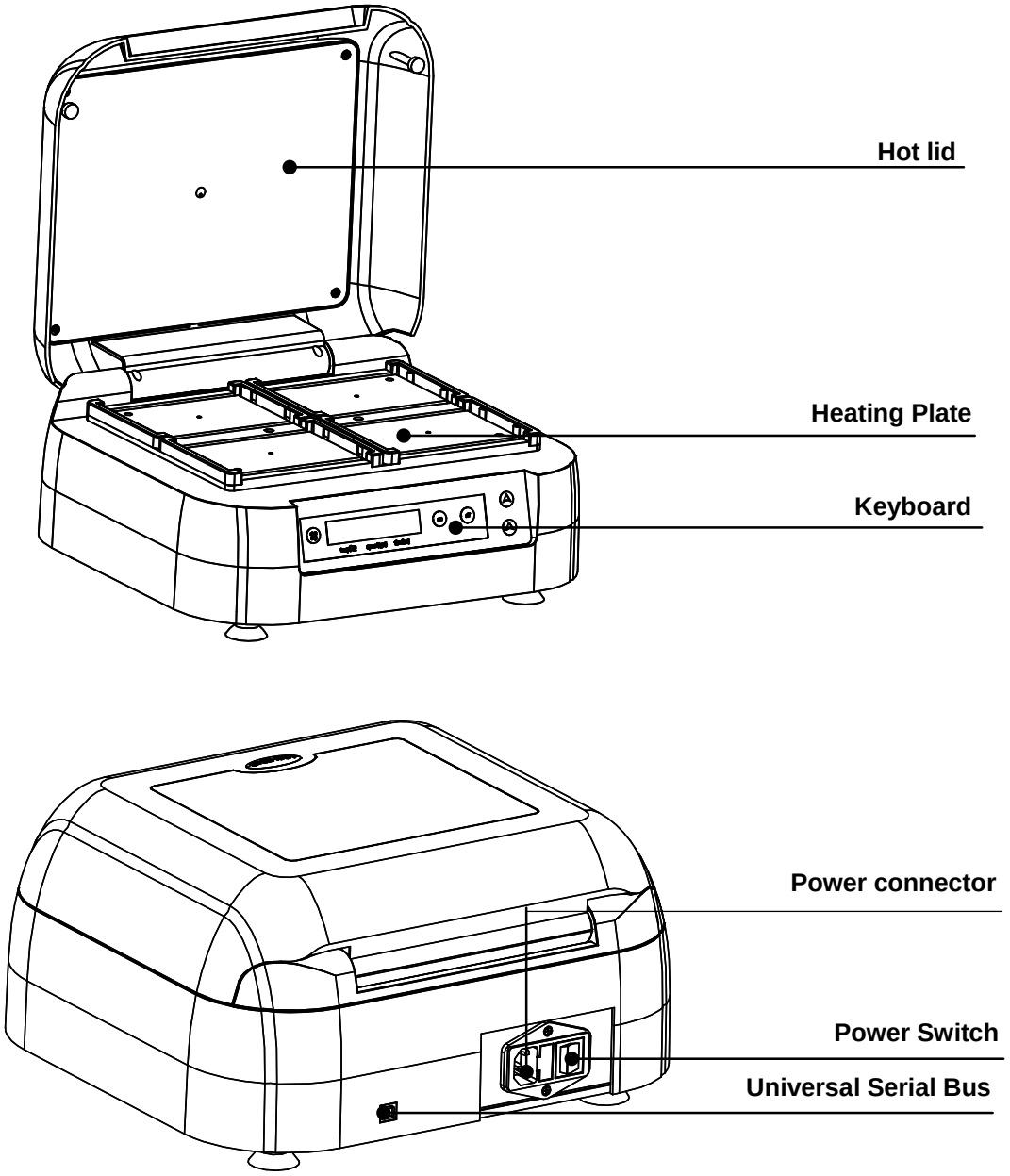

2. Keyboard and Display panel



Display Panel：

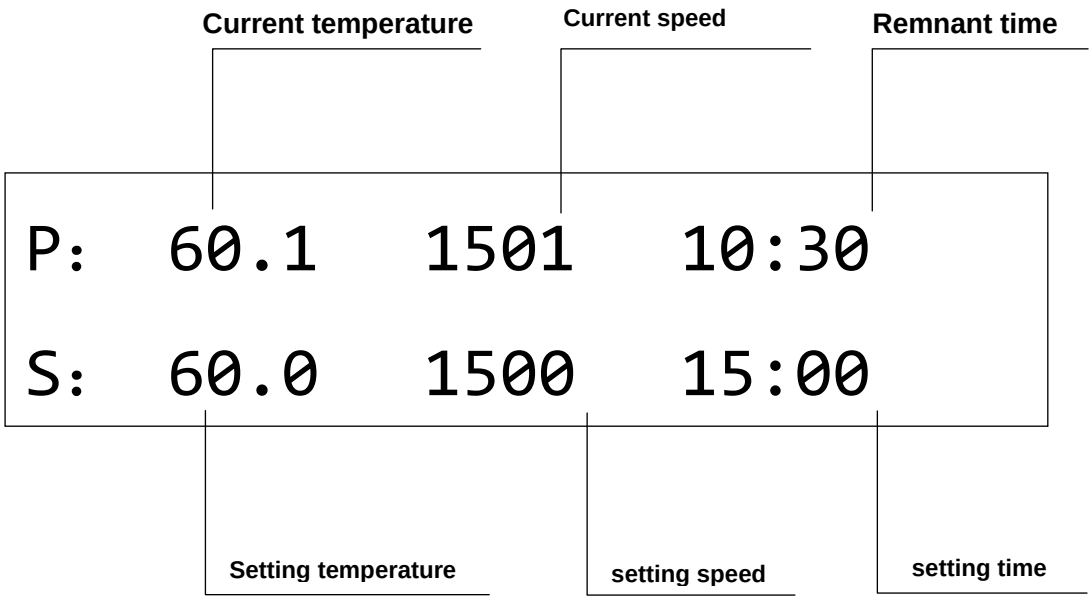

3. Key Functions

OFF	**Shut or open temperature and speed and time function**
SET	**Setting key, used together with " ▲ "and "▼ " to set the temperature , speed and time**
STOP/START	**Stop/start key. Pressing this key to stop or start the procedure. Pressing momentary to start, Pressing continuously to stop.**
▲	**Increasing key for the temperature or speed or time**
▼	**Decreasing key for the temperature or speed or time**

Chapter 4 Operation Guide

1. Temperature, speed and time set

a) The LCD will display the picture as the chart when the instrument powers on and the instrument goes into the initial state with the sound of “du…”;

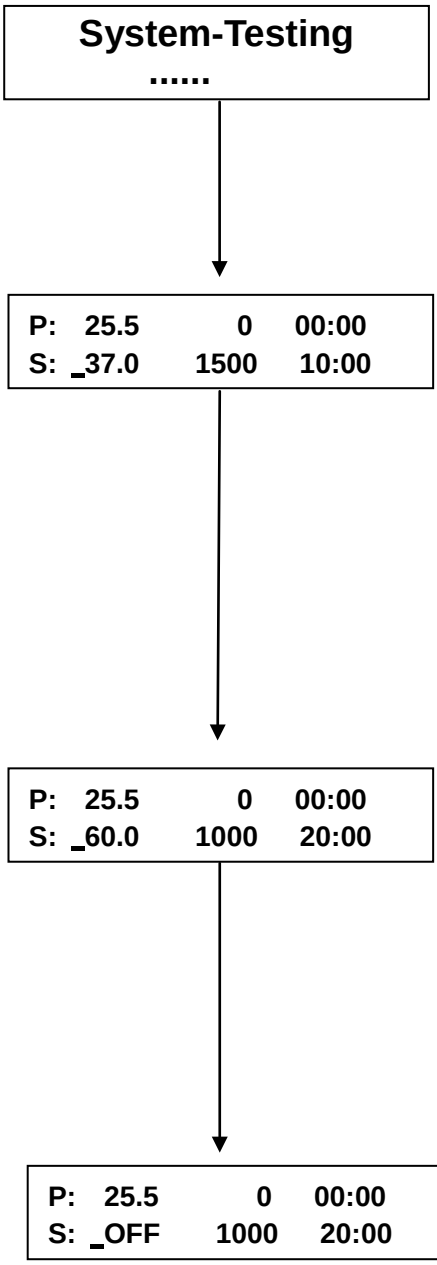

b) About 6s later, P line will display: 25.5 is the heating block’s current temperature; 0 is the current speed; 00:00 is the current remnant time. S line will display: 37.0 is the former set temperature; 1500 is the former set speed; 10:00 is the former set time.

c) Press “SET” and keep off at once. Then look “S:” line , there is a cursor “_”, press “SET” to remove the cursor, and press ▲ or ▼ to change the digital on the cursor into the one required. (for example: as show in the right chart, the current temperature is 25.5ºC , the set temperature is 60ºC, the current speed is 0 rpm, the set speed is 1000 rpm, and the mixing time is 20h.

d) If want to shut off temperature function, press “SET” and remove the cursor “_” to the temperature column, and press “OFF” temperature column will be displayed “OFF”. It’s the same as shut off the speed and time function.

Notes: 1) Time function set "OFF", the time means run for continuous.

2) Temperature, speed and time can't be set "OFF" simultaneously

3) The instrument start to heat automatically according to the previous set temperature as soon as power on.

2. Run, Pause and stop functions

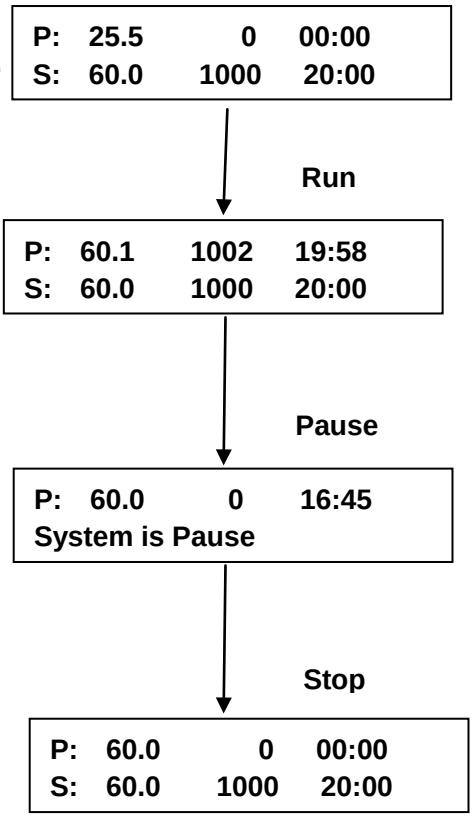

a) Press "STOP/START" key instantaneous to run.

Notes:

1. When the current temperature arrives the set temperature, the time start to count backwards and the symbol of ":" will flicker in the circle of 2s.

2. When run over , the buzzer alarms.

b) Press "STOP/START"key instantaneous to pause the program when it is running, press "STOP/START" again to continue the program.

c) Press "STOP/START" for 1 seconds continuously to stop, The temperature will keep on, the speed displays 0, the time displays 00:00.

3. Instantaneous mixing functions

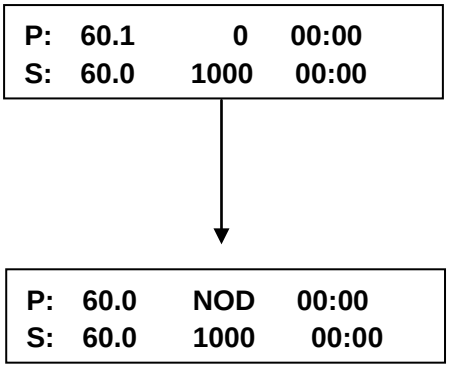

a) **Press "SET" ,after the "S:" there is a cursor "_" , press "SET" to remove the cursor, and remove the cursor uder the time column, press "▼" or "▲" , the time can be changed to 00:00.**

b) **Press "STOP/START", the instrument will be mixing 6s and then stop.**

4. Fix microtest plates

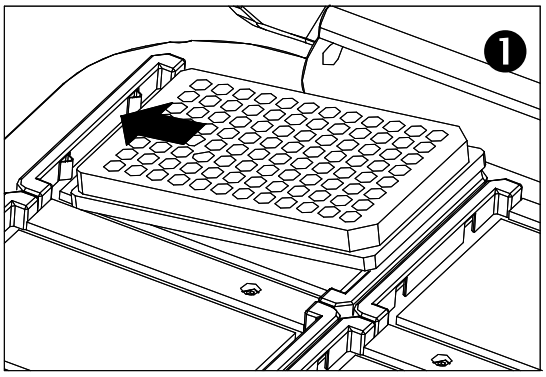

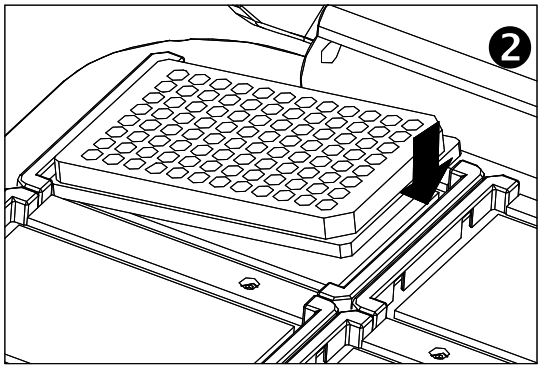

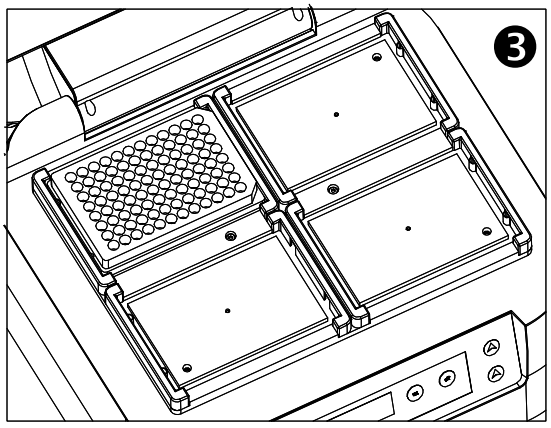

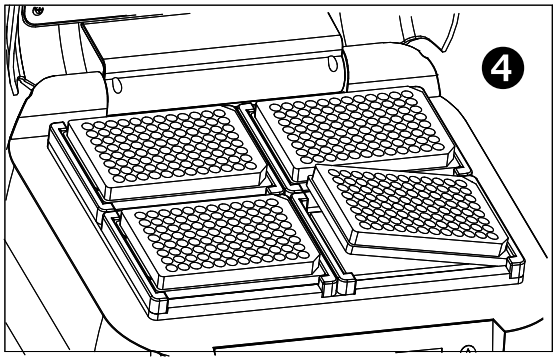

Chapter 5 Failure analysis and troubleshooting

Failure analysis and processing procedures

No.	Phenomenon	Possible Causes	Processing Procedure
1	No signals on the display when it is powered on.	No power	Check the power
		Broken Power Line	Exchange Power Line
		Broken switch	Exchange the switch
		Others	Contact to the seller
2	The actual and displayed temperatures are quite different.	Broken sensor	Contact to the seller
3	“OPE.1” in the temperature display with the alarm of “du...”	Temperature sensor of the lid are disconnection	Contact to the seller
4	“OPE.2” in the temperature display with the alarm of “du...”	Temperature sensor of the heating plate are disconnection	Contact to the seller
5	“SHO.1” in the temperature display with the alarm of “du...”	Temperature sensor of the lid are short	Contact to the seller
6	“SHO.2” in the temperature display with the alarm of “du...”	Temperature sensor of the heating plate are short	Contact to the seller
7	“HHH.1” in the temperature display with the alarm of “du...”	Over temperature of the lid	Contact to the seller
8	“HHH.2” in the temperature display with the alarm of “du...”	Over temperature of the heating plate	Contact to the seller
9	“ERR1” in the speed display with the alarm of “du...”	Rotor locked	Contact to the seller
10	“ERR2” in the speed display with the alarm of “du...”	Rotor is running ,but display is “0 rpm”	Contact to the seller
11	“ERR3” in the speed display with the alarm of “du...”	Actual Speed over max. speed	Contact to the seller
12	No heating of the heating block	Broken heater	Contact to the seller
13	Press invalid	Broken film switch	Contact to the seller

Annex 1 Wiring Diagram of TRM-4 Thermo Shaker

(This diagram is just for you reference. If there is any change, excuse for no notice.）

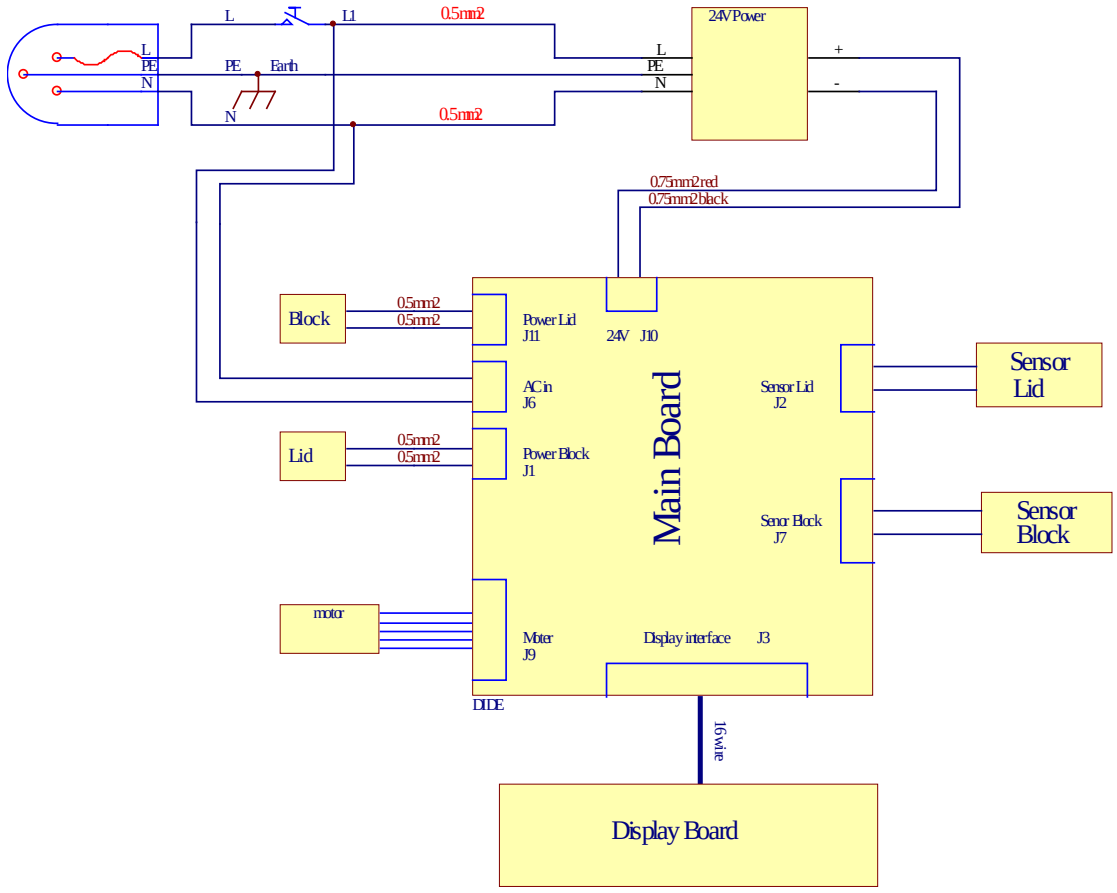

Note