Customizable reactors on demand

FOR LABORATORY AND PILOT PLANT WITH HEATING ANS COOLING SYSTEMS
BOROSILICATE GLASS 3.3. CAPACITY: FROM 0,5 UP TO 5 LITRES.
AISI 304 - 316 – 316L STAINLESS STEEL LITRES CAPACITY: FROM 12 UP TO 5 LITRES.

Borosilicate glass 3.3: Spherical, cylindrical and thermostatic with or without PTFE release valve with temperature control accessories, PH, oxygen, turbidity, etc. Heidolph stirring systems and variable PTFE blades.

Aisi 304 - 316 - 316 L : Cylindrical and thermostatic with or without release valve. With temperature control accessories, PH, oxygen, turbidity, etc.

Fixed and variable stirring systems of different powers according to viscosity and density, combined with stirring elements, dispersers and emulsifiers micronizers and helical.

REQUEST INFORMATION.



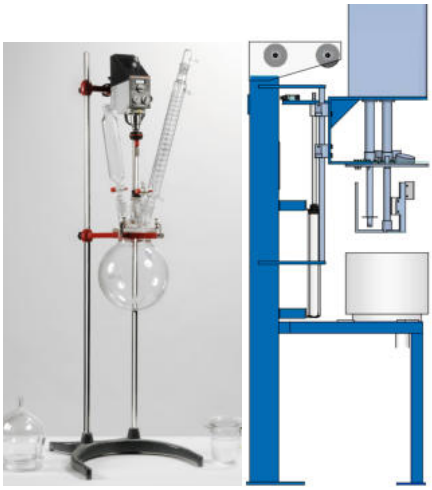

Parts and assembly of reactors. Ø 100 UK





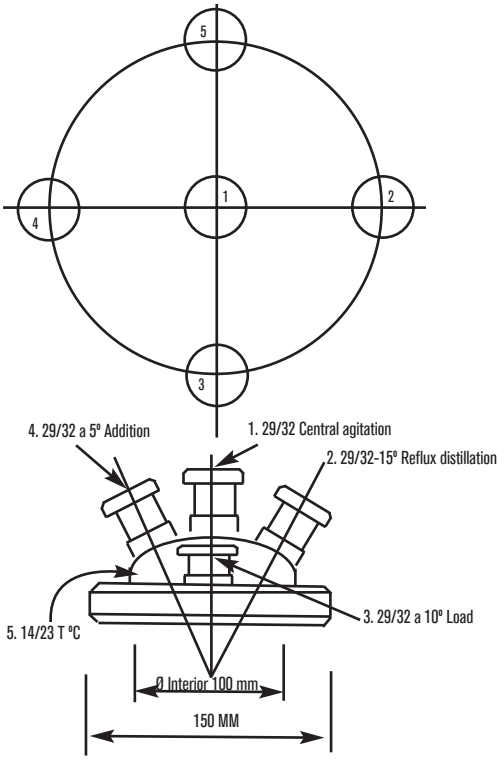

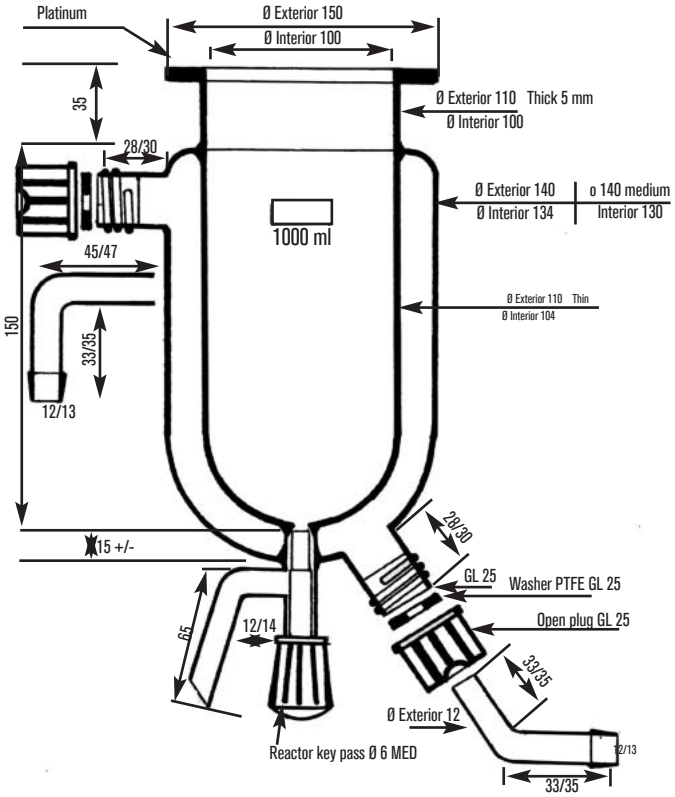

REACTOR

Capacity	Code
0,5 liters	1001960
1 liters	1001880
2 liters	1001879
5 liters	1001950

REACTOR COVER

No. Nozzles	Code
5 Nozzles	1001790
5 Nozzles*	1001892

*With SAV thread