Clamps and Stands

CLAMPS MADE OF LIGHT WEIGHT "DURAL CROM" ALLOY EXTRAORDINARILY STRONG.
TONGS MADE OF AISI 304 STAINLESS STEEL.
RETORT STANDS - LABORATORY JACKS AND SCAFFOLDING.

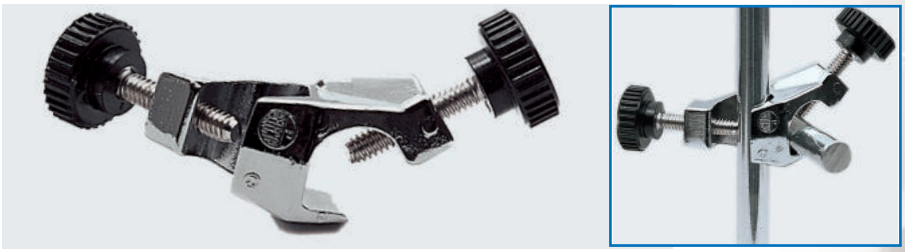

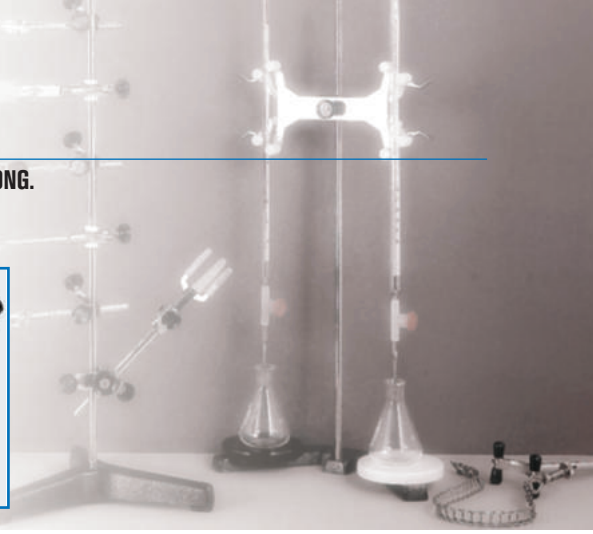

BOSSHEAD
Chrome plated. For Ø from 5 to 17 mm.
Part No. 1000069

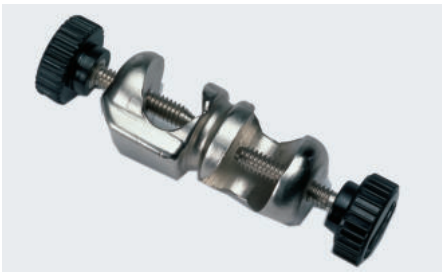

BOSSHEAD "MINI"
Chrome plated. For Ø from 5 to 12 mm.
Part No. 1001460

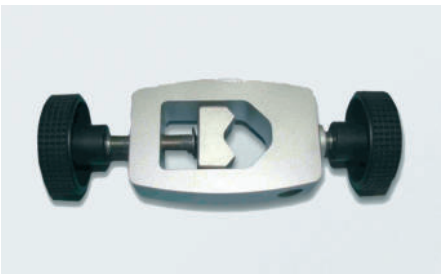

BOSSHEAD XL
Maximum opening. For rods 13 to 32 mm Ø.
Part No. 5057022



BOSSHEAD "MEDI"
For Ø from 5 to 20 mm.
Part No. 1001461 Chrome plated.
Part No. 1001462 Anodised black.

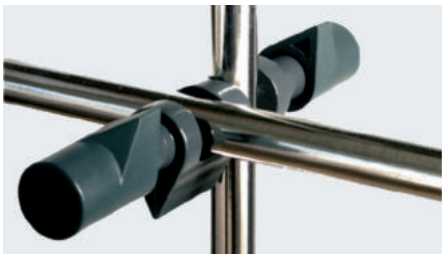

BOSSHEAD "SUNTECH"
For retort bars of 5 to 22 mm Ø.
With screw clamp joints. Ideal for supporting overhead stirrers.
Part No. 5900600



BOSSHEAD "MAXIM"
For large diameters.
Chrome plated with one opening to hold rods up to 30 mm Ø. Second opening up to 20 mm Ø.
Part No. 7000408

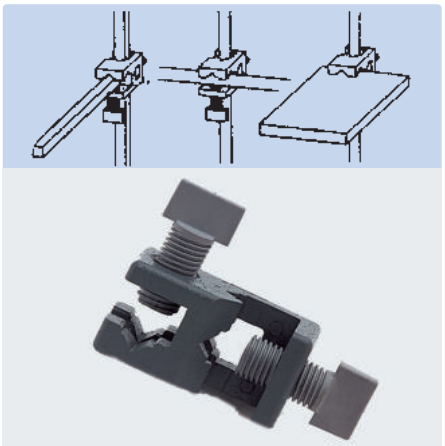

BOSSHEAD "PASS"
Original Phywe.
For joining and clamping multipurpose, round or rectangular rods up to 12 mm across.
For cross T and parallel arrangements.
Part No. 7204055

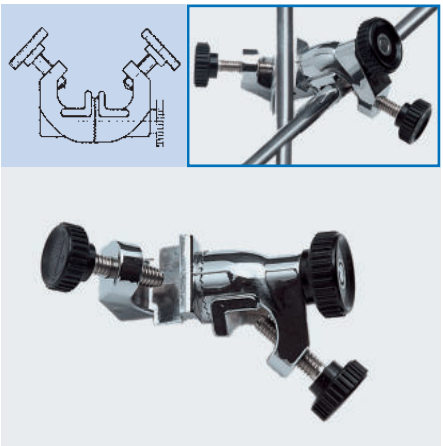

BOSSHEAD "GIROFIX"
Conforms to DIN standard 12895-E16.
Chrome plated with swivel toothed clamp for holding rods at any angle. For rod Ø from 5 to 15mm.
Part No. 7000531



J.P Selecta

OIRIGINAL BOSSHEAD "TREVINGE"
Made of chrome plated "Dural" alloy.
Due to its strength, it is suitable for multilevel and three dimension constructions.
Part No. 7008133 For Ø of 9 to 13 mm.
Part No. 7008253 For Ø of 19 to 25 mm.

Stands

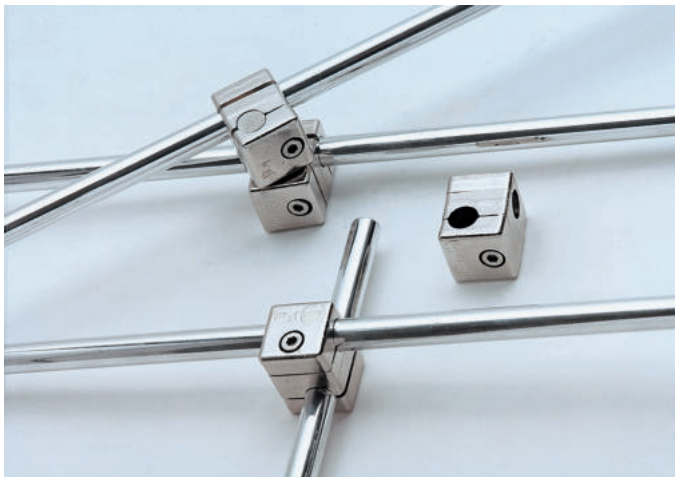

BOSSHEAD "P" TYPE
Nickel alloy bosshead.
For fixing perpendicular structures.
For 12 mm Ø bars.
Part No. 1000011

ACCESSORY
Allen hex key. Suitable for "P" type bosshead.
Part No. 1000111

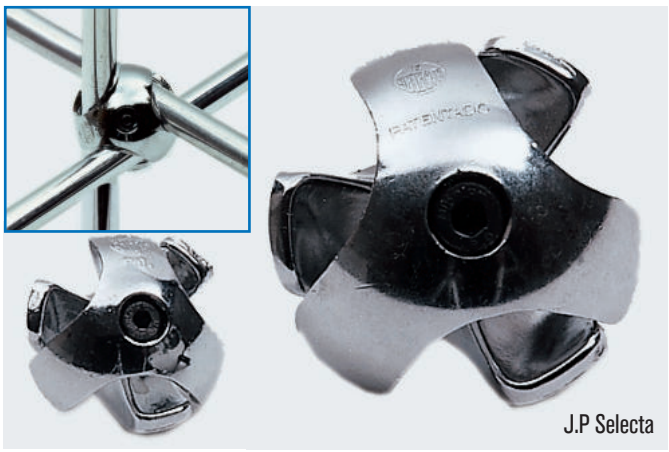

ORIGINAL BOSSHEAD "TREVINGE"
Made of chrome plated "Dural" alloy.
Due to its strength, suitable for multilevel and three dimension constructions.
Part No. 7008133 For Ø of 9 to 13 mm.
Part No. 7008253 For Ø of 19 to 25 mm.



RODS AND TUBES
12 mm Ø bars and rods. To be used with the "TREVIN" and "P" type bossheads.

Dur-aluminium rods.		**AISI 304 stainless steel tube.**	
Part No.	Length	Part No.	Length
6000026	60 mm.	6000016	60 mm.
6000220	200 mm.	6000120	200 mm.
6000235	350 mm.	6000135	350 mm.
6000270	700 mm.	6000170	700 mm.
6002100	1000 mm.	6001100	1000 mm.
6002150	1500 mm.	6001150	1500 mm.
6002200	2000 mm.	6001200	2000 mm.
6002300	3000 mm.	6001300 (rod)	3000 mm.

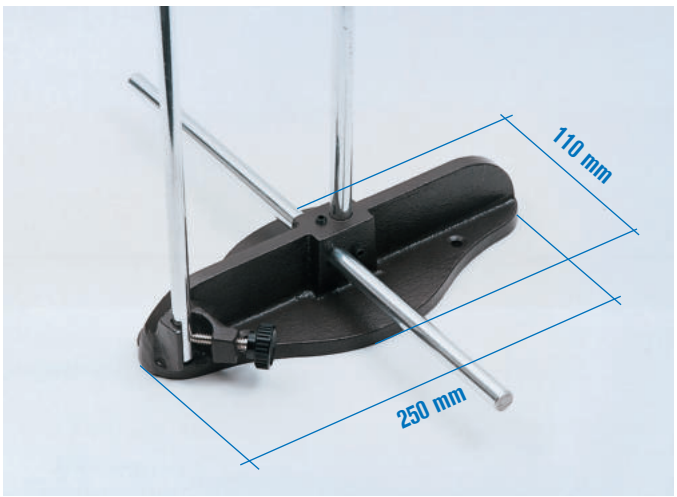

UNIVERSAL MOUNTING BASE
Bench top multiple rod support.
Suitable for mounting and supporting vertical and horizontal bars.
Part No. 1000050



MOUNTING FOOT SUPPORT FOR RODS
For rod Ø of 12 mm.
Part No. 1000101 Rod position horizontal.
Part No. 1000049 Rod position vertical.



SIMULTANEOUS FOOT SUPPORT
For rod Ø of 12 mm.
Simultaneous positions, horizontal and vertical.
Part No. 1001102



BENCH CLAMP "PASS"
Original Phywe. Clamps to the bench while holding from 4 to 12 mm diameter rod. Bench top width up to 40mm.
Part No. 1394855