Racks, baskets and storage for tubes pipettes and flasks



TUBE RACKS

Schematic diagram indicating external measurements A-B-C-D

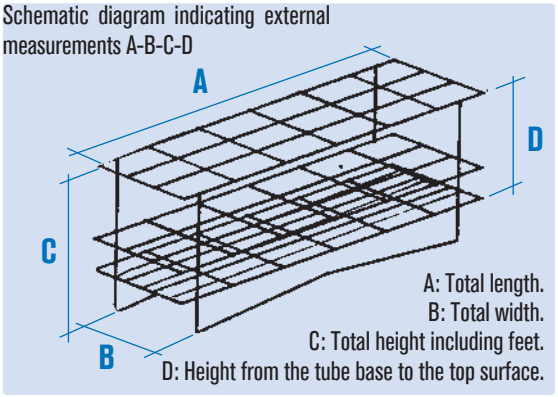

A: Total length.
B: Total width.
C: Total height including feet.
D: Height from the tube base to the top surface.



Part No.	Made of	Number of tubes	For tube Ø up to	Dimensions ext. mm A	B	C	D
1001563	Stainless steel	24 (6 x 4)	13 mm VAC	95	70	70	60



Part No.	Made of	Number of tubes	For tube Ø up to	Dimensions ext. mm A	B	C	D
1001212	PVC coated wire	12 (4 x 3)	13 mm	65	50	65	50
1025500	Stainless steel wire AISI 304	12 (4 x 3)	13 mm	65	50	65	50

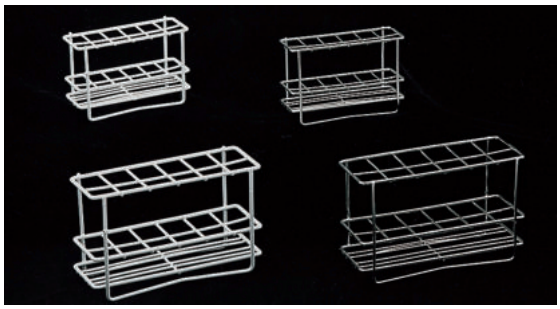

Part No.	Made of	Number of tubes	For tube Ø up to	Dimensions ext. mm A	B	C	D
1026112	PVC coated wire	12 (6 x 2)	16 mm	120	45	80	65
1026412	PVC coated wire	12 (6 x 2)	25 mm	180	65	110	95
1025512	Stainless steel wire AISI 304	12 (6 x 2)	16 mm	120	45	80	65
1025812	Stainless steel wire AISI 304	12 (6 x 2)	25 mm	180	65	110	95

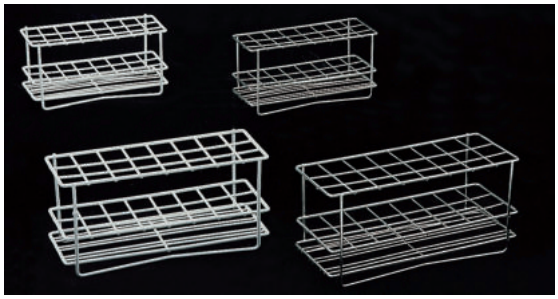

Part No.	Made of	Number of tubes	For tube Ø up to	Dimensions ext. mm A	B	C	D
1026124	PVC coated wire	24 (8 x 3)	16 mm	160	65	80	65
1026424	PVC coated wire	24 (8 x 3)	25 mm	235	95	110	95
1025524	Stainless steel wire AISI 304	24 (8 x 3)	16 mm	160	65	80	65
1025824	Stainless steel wire AISI 304	24 (8 x 3)	25 mm	235	95	110	95

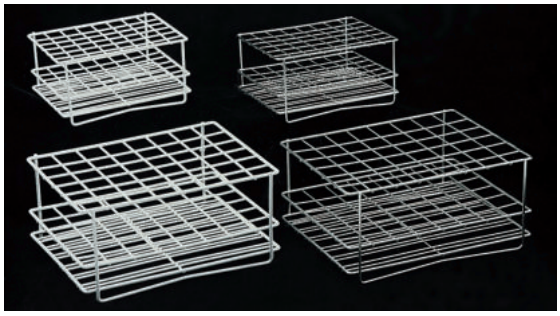

Part No.	Made of	Number of tubes	For tube Ø up to	Dimensions ext. mm A	B	C	D
1026148	PVC coated wire	48 (8 x 6)	16 mm	160	125	80	65
1026448	PVC coated wire	48 (8 x 6)	25 mm	235	180	110	95
1025548	Stainless steel wire AISI 304	48 (8 x 6)	16 mm	160	125	80	65
1025848	Stainless steel wire AISI 304	48 (8 x 6)	25 mm	235	180	110	95