SUPPORT STAND KITS

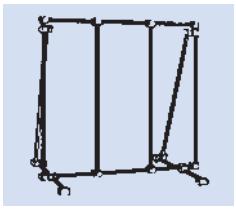

700 high x 700 mm long.
Made up of:
8 rods 700 mm long.
2 rods 350 mm long.
16 “P” type bossheads.
4 foot supports.
1 Allen key.
Part No. 6000090 **Dur-aluminium**
Part No. 6000190 **AISI 304 stainless steel**

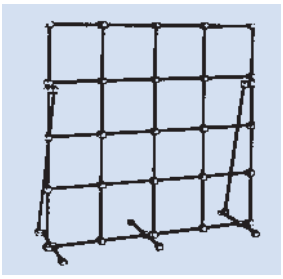

1000 high x 1000 mm long.
Made up of:
10 rods of 1000mm long.
2 rods 700 mm long.
3 rods 350 mm long.
34 “P” type bossheads.
6 foot supports.
1 Allen key.
Part No. 6000902 **Dur-aluminium**
Part No. 6001902 **AISI 304 stainless steel**

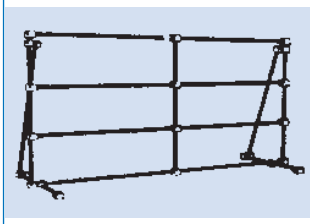

700 high x 1000 mm long.
Made up of:
4 rods 1000 mm long.
5 rods 750 mm long.
2 rods 350 mm long.
20 “P” type bossheads.
4 foot supports.
1 Allen key.

Part No. 6000901 **Dur-aluminium**
Part No. 6001901 **AISI 304 stainless steel**

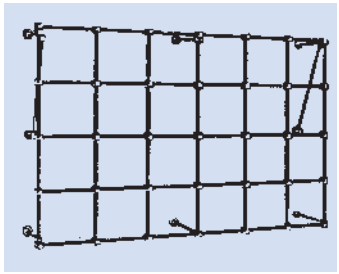

1000 high x 2000 mm long.
Made up of:
5 rods 2000 mm long.
7 rods 1000 mm long.
8 rods 200 mm long.
2 rods 350 mm long.
45 “P” type bossheads.
8 foot supports.
1 Allen key.
Part No. 6000903 **Dur-aluminium**
Part No. 6001903 **AISI 304 stainless steel**



SUPPORT “STAND”
Solid base, three vertical rods of 800 mm in height, two horizontal rods of 500 mm in length, six “P” type bossheads. Made of Dur-aluminium.
Weight: 6.5 Kg.
Part No. 6000482

CENTRAL ROD RETORT STAND
Vertical rod of Dur-aluminium of 10 Ø x 600mm high.
Weight: 3 Kg.
Base dimensions 315 x 200 mm.
Part No. 6000046



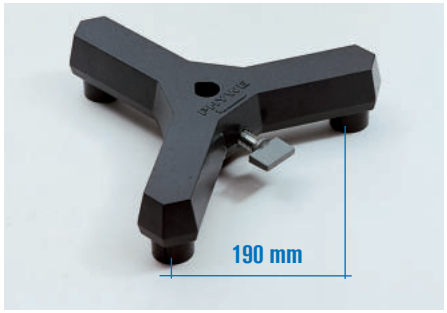

TRIPOD SUPPORT “PASS”
Original Phywe.
To support square and round rods from 6 to 14 mm dia.
Weight: 2 Kg.
Base with levelling screws.
Part No. 6200255

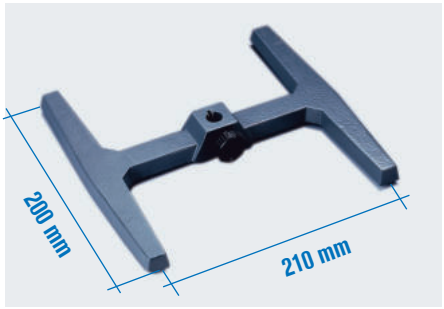

DOUBLE BASE SUPPORT T “MINI”
Small foot support with screw clamp for removable rods from 8 to 12 mm Ø.
Weight: 1.2 Kg.
Part No. 6001103

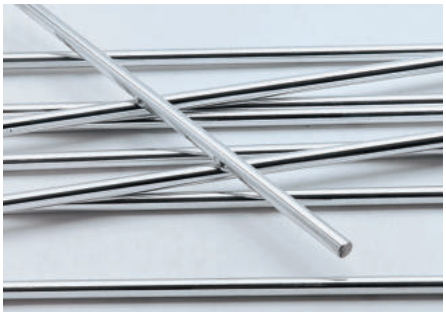

STANDARD RODS
Made from AISI 340 stanless steel. Suitable for double "T MINI" and Tripod "PASS"

Part No. 6001160	8 Ø x 500 mm length
Part No. 6000534	10 Ø x 600 mm length
Part No. 6000535	12 Ø x 700 mm length