Manufactured O.E.M

Poupinel dry heat sterilizer “Drytime II”

ADJUSTABLE TEMPERATURES FROM 50 °C UP TO 200 °C.
STABILITY: ±6 °C.



APPLICATIONS
For quick surgical sterilization of diverse instruments surgical odontological, etc.

FEATURES
Heating by shielded elements in the base which provide a rapid temperature rise.
Flap door.
Inner chamber in AISI 304 stainless steel.
Removable tank with extraction clamps.
Epoxy-coated outer casing.

SAFETY
Over temperature cut out incorporated. EN.61010 Standard.

CONTROL PANEL
Mains switch.
Mains indicator lamp.
Hydraulic thermostat for temperature control.
Timer 0 to 120 min. with automatic off.

MODEL

Part No.	Capacity litres	Height / Width / Depth (interior) cm	Height / Width / Depth (exterior) cm	Power W	Weight Kg
2000912	1,5	6,5 25 12	15 31 20	300	4

Poupinel dry heat sterilizer “Dryterm”

ADJUSTABLE TEMPERATURES FROM 60 °C UP TO 250 °C.
STABILITY: ±10 °C.

APPLICATIONS
For surgical sterilization of diverse instruments surgical odontological,etc.

FEATURES
Heating by shielded elements in the base that provides a rapid rise in temperature.
Flap door.
Inner chamber made of AISI 304 stainless steel, complete with a heater cover, three shelf runners and two perforated shelves 10 mm high.
Epoxy-coated outer casing.

SAFETY
Over temperature cut out incorporated. EN.61010 Standard.

CONTROL PANEL
Hydraulic thermostat temperature control.
Locking device for thermostat knob.
Timer 0 to 120 min. with automatic switch off.
Heater “ON” indicator.
Analogue temperature reading thermometer.



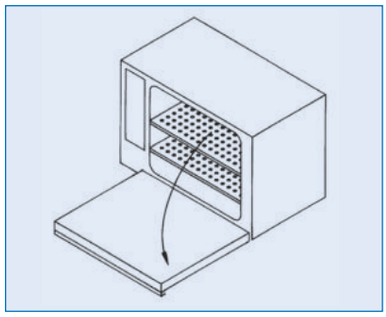

MODEL

Part No.	Capacity litres	Height / Width / Depth (interior) cm	Height / Width / Depth (exterior) cm	Power W	Weight Kg
2000787	19	25 32 23	37 54 34	770	19