# Vacuum pump “2XZ - 2B”

**ROTARY VANE PUMPS WITH BUILT-IN OIL CHECK VALVE FOR GENERAL VACUUM APPLICATIONS.**
**MOTOR WITH THERMAL PROTECTOR AND START SWITCH.**

## FEATURE

Asbestos-free vanes and gaskets.
Suction port of Ø 25 mm.
Analog vacuum gauge.
Large oil volume and forced lubrication.
Oil tank capacity: 1150 ml
Expulsion filter for oil vapor retention.
Single acting. No vibrations.
Low noise level (62 dB).
Maximum working temperature: 40 °C.
Portable, they have a handle for transport.



*Code 5900622*



**FILTER SILENCER FOR VACUUM PUMP**
Code: 5515032

## MODEL

| Part No. | Pump rate m³/h | Vacuum limit mbar | Height / Width / Depth (exterior) cm | r.p.m. | Power W | Weight Kg |
|---|---|---|---|---|---|---|
| 5900622 | 7,2 | 0.5 | 34 35 14 | 1400 | 180 | 11 |

## SPARE PARTS

**Pump connection kit:** 1500019

# Heated vacuum desiccator “Vacuo-Temp”

**WITH TEMPERATURE THERMIC LIMITER.**
**TIME AND TEMPERATURE DIGITAL ELECTRONIC CONTROL.**
**ADJUSTABLE TEMPERATURE FROM AMBIENT +5 °C TO 170 °C.**
**STABILITY: ±2 °C. RESOLUTION: 1 °C.**
**TIME FROM 1’ TO 999’, OR CONTINUOUS.**



## FEATURES

AISI 304 stainless steel outer casing.
Polished aluminium alloy flat surface plate with an effective vacuum seal.
Tempered glass bell jar with silicon gasket seal.
Shielded heating element.
Pt 100 temperature probe.
Vacuum pump connection at the back of the unit.
Vacuum bleed valve.

## CONTROL PANEL

Main switch.
Analogue vacuum gauge.
Digital time & temperature display.
Overheating alarm.
Visualized parameter indicator.
Push button for the visualized parameter.
Push button to increase the parameter.
Push button to decrease the parameter.
Button On-Off.

## MODEL

| Part No. | Vacuum Max | Usable volume litres | Ø heating plate cm | Heigth / Width /Depth (exterior) cm | Power W | Weight Kg |
|---|---|---|---|---|---|---|
| 4000474 | $10^{-2}$ mm Hg | 3 | 23.5 | 17 28 34 | 540 | 9 |

Supplied complete with bell jar and silicon seal.

## SPARES

**Tempered glass bell** 15 cm high and 23 cm Ø.
Part No. 4000475
**Silicon seal.** Part No. 4000476

# Desiccator for materials

**WITH HYDROMETER CONTROL.**



## APPLICATIONS

Cabinet with protection against humidity and dust for anhydrous, biological and chemical preservation of samples.

## FEATURE

Made of robust transparent 12mm thick methacrylate.
The door has a silicon seal and magnetic catch.
Volume: 55 Litres.
Dimensions 50 cm high x 38 cm wide x 29 cm deep.
Supplied complete with three perforated shelves and a stainless steel AISI 304 tray to hold desiccating material.
Part No. 1001403

# Clamps and Stands

**CLAMPS MADE OF LIGHT WEIGHT "DURAL CROM" ALLOY EXTRAORDINARILY STRONG.**
**TONGS MADE OF AISI 304 STAINLESS STEEL.**
**RETORT STANDS - LABORATORY JACKS AND SCAFFOLDING.**

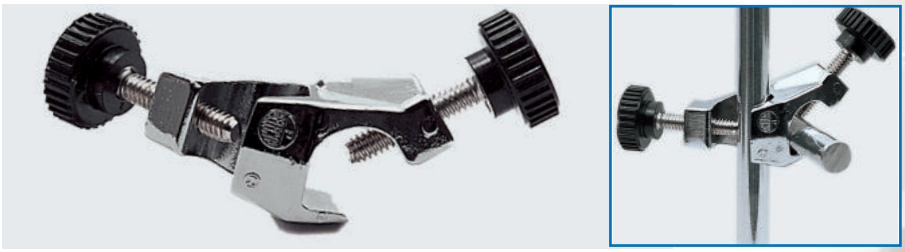



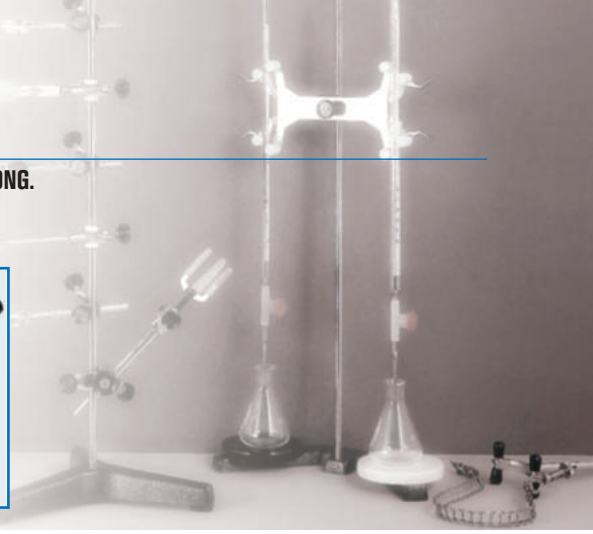

**BOSSHEAD**
Chrome plated. For Ø from 5 to 17 mm.
Part No. 1000069

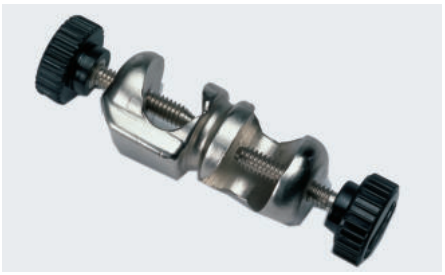

**BOSSHEAD "MINI"**
Chrome plated. For Ø from 5 to 12 mm.
Part No. 1001460

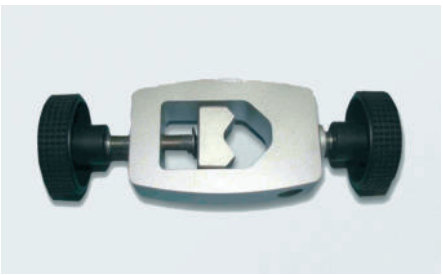

**BOSSHEAD XL**
Maximum opening. For rods 13 to 32 mm Ø.
Part No. 5057022



**BOSSHEAD "MEDI"**
For Ø from 5 to 20 mm.
Part No. 1001461 Chrome plated.
Part No. 1001462 Anodised black.

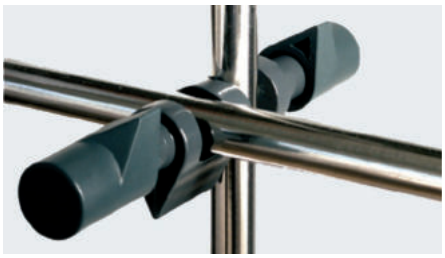

**BOSSHEAD "SUNTECH"**
For retort bars of 5 to 22 mm Ø.
With screw clamp joints. Ideal for supporting overhead stirrers.
Part No. 5900600



**BOSSHEAD "MAXIM"**
**For large diameters.**
Chrome plated with one opening to hold rods up to 30 mm Ø. Second opening up to 20 mm Ø.
Part No. 7000408

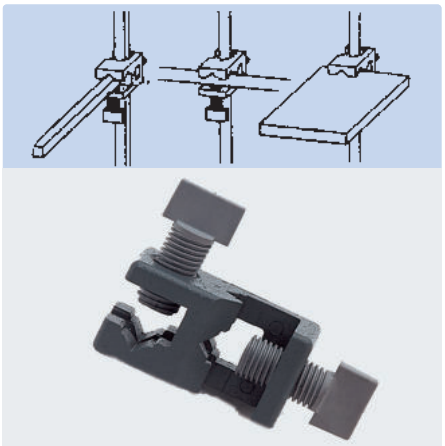

**BOSSHEAD "PASS"**
Original Phywe.
For joining and clamping multipurpose, round or rectangular rods up to 12 mm across.
For cross T and parallel arrangements.
Part No. 7204055

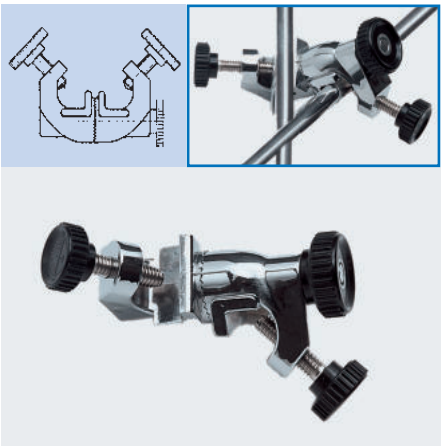

**BOSSHEAD "GIROFIX"**
**Conforms to DIN standard 12895-E16.**
Chrome plated with swivel toothed clamp for holding rods at any angle. For rod Ø from 5 to 15mm.
Part No. 7000531



J.P Selecta

**OIRIGINAL BOSSHEAD "TREVINGE"**
Made of chrome plated "Dural" alloy.
Due to its strength, it is suitable for multilevel and three dimension constructions.
Part No. 7008133 For Ø of 9 to 13 mm.
Part No. 7008253 For Ø of 19 to 25 mm.