NEW

Water bath "UNIVEBA mini 1.3L"

FOR ADJUSTABLE TEMPERATURES FROM 30ºC TO 96ºC, STABILITY ±2ºC

EASY EMPTYING WITH REMOVABLE TANK



FEATURES

- Body made of ABS
- Glass jar with built-in heating element
- Heating element in stainless steel
- Supplied with a lid

CONTROL PANEL

- ON-OFF push button
- Display for actual temperature
- Display for selected temperature
- Rotary temperature selection button
- Light push button
- Boil push button
- Temperature hold push button

Code	Capacity liters	Ø (useful)	Height (cm)	Ø external	External height (cm)	Consumption W	Weight Kg
3000403	1,3	17	15	18	24	850	3

Water bath "UNIVEBA II 3L"

NEW

FOR ADJUSTABLE TEMPERATURES FROM 30ºC TO 96ºC, STABILITY ±2ºC

EASY EMPTYING WITH REMOVABLE TANK

FEATURES

- Body made of ABS
- Jar made of 304 stainless steel with element
- Inverted heating element inside
- Heating element in 304 stainless steel

CONTROL PANEL

- ON-OFF push button
- Display for actual temperature
- Display for selected temperature
- Rotary temperature selection button
- Light push button
- Boil push button
- Temperature hold push button



Code	Capacity liters	Ø (useful)	Height (cm)	Ø external	External height (cm)	Consumption W	Weight Kg
3000404	3	17	15	18	24	850	3

ACCESSORIES

1) Lid with reducing discs 110, 80, 60, and 37 mm Ø with hole for thermometer **Código** 7004001
2) Rack for 24 hemolysis tubes up to 13 mm Ø **Código** 7004002
3) Rack for 24 tubes up to 18 mm Ø **Código** 7000541

Clamps and Stands

CLAMPS MADE OF LIGHT WEIGHT "DURAL CROM" ALLOY EXTRAORDINARILY STRONG.
TONGS MADE OF AISI 304 STAINLESS STEEL.
RETORT STANDS - LABORATORY JACKS AND SCAFFOLDING.

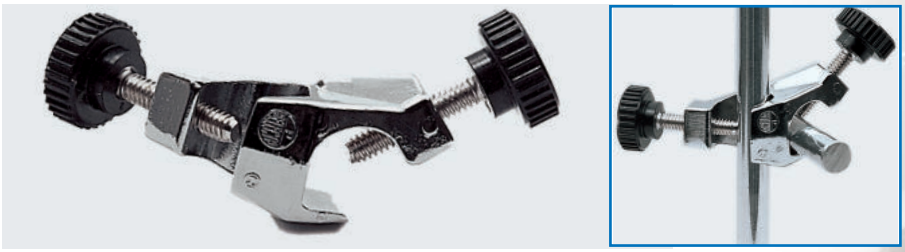

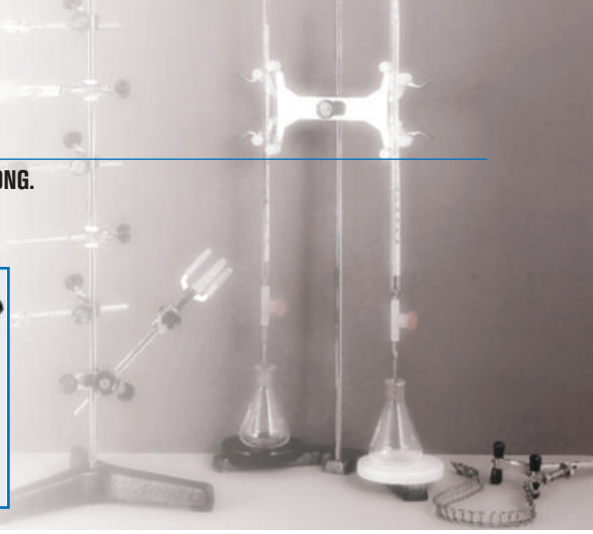

BOSSHEAD
Chrome plated. For Ø from 5 to 17 mm.
Part No. 1000069

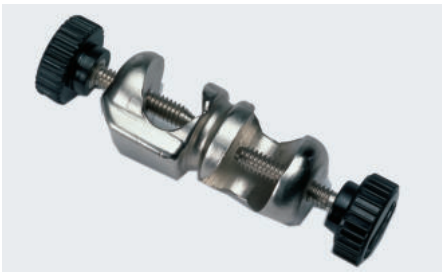

BOSSHEAD "MINI"
Chrome plated. For Ø from 5 to 12 mm.
Part No. 1001460

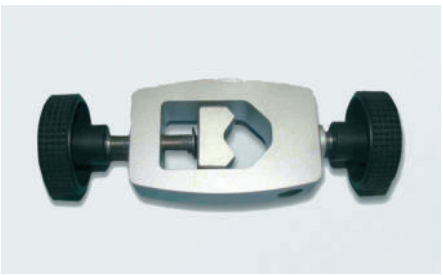

BOSSHEAD XL
Maximum opening. For rods 13 to 32 mm Ø.
Part No. 5057022



BOSSHEAD "MEDI"
For Ø from 5 to 20 mm.
Part No. 1001461 Chrome plated.
Part No. 1001462 Anodised black.

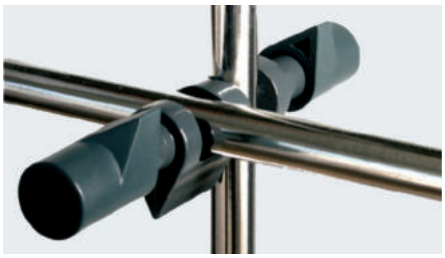

BOSSHEAD "SUNTECH"
For retort bars of 5 to 22 mm Ø.
With screw clamp joints. Ideal for supporting overhead stirrers.
Part No. 5900600



BOSSHEAD "MAXIM"
For large diameters.
Chrome plated with one opening to hold rods up to 30 mm Ø. Second opening up to 20 mm Ø.
Part No. 7000408

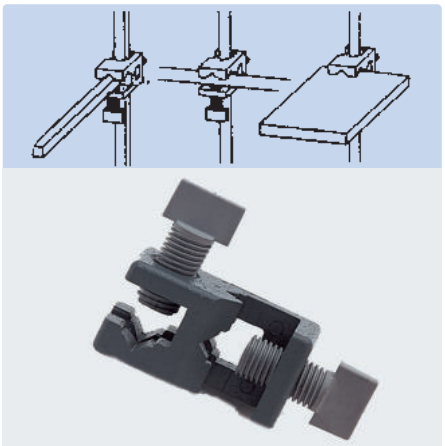

BOSSHEAD "PASS"
Original Phywe.
For joining and clamping multipurpose, round or rectangular rods up to 12 mm across.
For cross T and parallel arrangements.
Part No. 7204055

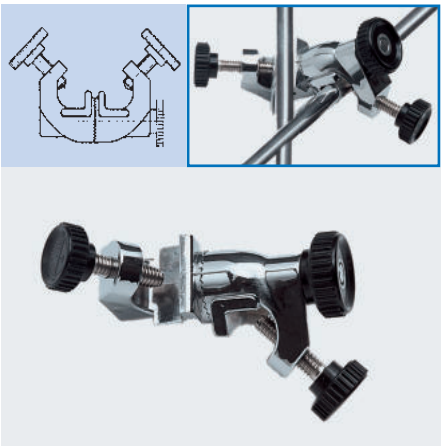

BOSSHEAD "GIROFIX"
Conforms to DIN standard 12895-E16.
Chrome plated with swivel toothed clamp for holding rods at any angle. For rod Ø from 5 to 15mm.
Part No. 7000531



J.P Selecta

OIRIGINAL BOSSHEAD "TREVINGE"
Made of chrome plated "Dural" alloy.
Due to its strength, it is suitable for multilevel and three dimension constructions.
Part No. 7008133 For Ø of 9 to 13 mm.
Part No. 7008253 For Ø of 19 to 25 mm.