letslab®

DELIVERING LAB SOLUTIONS



LBX ELFH – 400 – 001
LBX ELFH – 550 – 001
LBX ELFH – 1K8 – 001

Please read the User Manual carefully before use and follow all operating and safety instructions

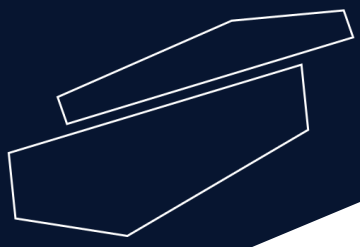

user manual

english

User Manual

EN

LBX ELFH – 400 – 001
LBX ELFH – 550 – 001
LBX ELFH – 1K8 – 001

Preface

Thank you for purchasing our product. Users should read this manual carefully, follow the instructions and procedures, and beware of all the preventive measures when using this instrument.

Service

If help is needed, you can always contact your dealer or Letslab via **www.letslab.com**

Please, provide the customer service representative with the following information:

- Serial number
- Description of the problem
- Your contact information

Warranty

This instrument is guaranteed to be free from defects in materials and workmanship under normal use and service, for a period of 12 months from the date of invoice. The warranty is extended only to the original purchaser. It shall not apply to any product or parts that have been damaged due to improper installation, improper connections, misuse, accident or abnormal conditions of operation.

For claim under the warranty, please contact your supplier.

SAFETY PRECAUTIONS



WHEN USED CORRECTLY, THESE UNITS POSE NO HEALTH RISK.

HOWEVER, THESE UNITS CAN DELIVER DANGEROUS LEVELS OF ELECTRICITY AND ARE TO BE OPERATED ONLY BY QUALIFIED PERSONNEL FOLLOWING THE GUIDELINES LAID OUT IN THIS INSTRUCTION MANUAL.

ANYONE INTENDING TO USE THIS EQUIPMENT SHOULD READ THE COMPLETE MANUAL THOROUGHLY.

THE UNIT MUST NEVER BE USED WITHOUT THE SAFETY LID CORRECTLY IN POSITION.

THE UNIT SHOULD NOT BE USED IF THERE IS ANY SIGN OF DAMAGE TO THE EXTERNAL TANK OR LID.

Cleaning and maintenance

HORIZONTAL UNITS

- Use warm water, but not above 60°C, as it can damage the unit and components
- Use a mild detergent or water with a mild concentration of soap.
- Do not leave the units in detergent for more than 30 min.
- Compatible detergents include dishwashing liquid, Hexane and Aliphatic hydrocarbons.
- **Never let the following cleaning agents come into contact with the unit:**
  - → Acetone
  - → Phenol
  - → Chloroform
  - → Carbon tetrachloride
  - → Methanol
  - → Ethanol
  - → Isopropyl alcohol

RNase DECONTAMINATION

This can by following the instructions below:

- Clean the units with mild detergent as described above
- Wash with 3% hydrogen peroxide (H_2O_2) for 10 min.
- Rinse with 0.1% DEPC (diethyl pyrocarbonate) treated with distilled water.



CAUTION: DEPC is a suspected carcinogen. Always take the necessary precautions when using it.

Operation instructions

SETTING UP THE HORIZONTAL GEL TANKS

Instructions for fitting the Electrode Cables:

1. Check the position of the lid on the unit. This shows the polarity and the correct orientation of the cables: black is negative and red is positive.

2. Remove the lid from the unit. Note that if the lid is not removed, fitting the cables may cause the gold plug to loosen and damage the electrode.

3. Screw the cables into the tapped holes as tightly as possible so that there is no gap between the lid and the leading edge of the cable fitting.

4. Refit the lid.

GEL POURING

Before pouring, let the gel cool to 50-60°C.

USING THE GEL BOX

1. Place the gel box on a level surface and place a gel tray that fits inside. To prevent leaking, both ends of the gel tray must be closely against the gel box.

2. Place the comb(s) in the tray.

3. Pour the agarose carefully so as not to make bubbles.

4. Let the gel settle and wait for it to set completely.

5. Pull the comb(s) out carefully and move the tray with the gel into the main tank.

USING THE GEL CASTING TRAY

1. Place the gel casting tray on a level surface and place a gel tray inside. Make sure the both ends of the tray are closely against the silicone mat.

2. Use the wrench to tighten the gel tray.

3. Put the comb(s) in the tray.

4. Pour the agarose carefully, so as not to generate bubbles. If any bubbles form, they can be smoothed and dispersed with the tip of a pipette.

5. Let the gel settle and wait for it to set completely.

6. Pull the comb(s) out carefully and move the gel tray to the main tank.

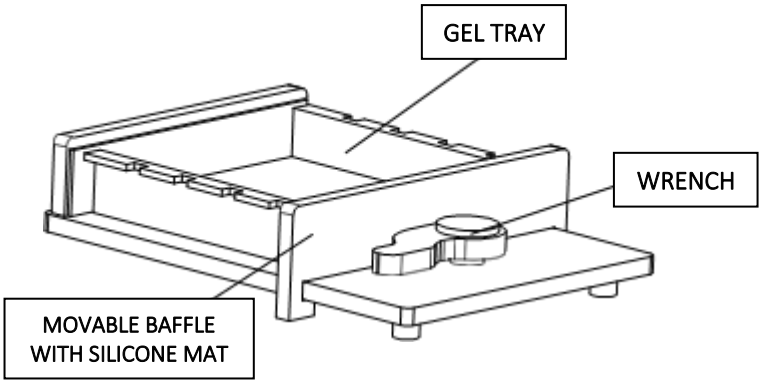

RUNNING THE GEL

1. Mix the sample with the buffer solution.
2. Pour the buffer into the tank until the gel is completely submerged. This will help the experiment be completed in a shorter time and with better quality results.
3. Load the samples into the wells using pipettes. Multi-channel pipettes can be used with MC compatible combs.
4. Carefully cover the tank with the lid and connect it to a voltage supply.
5. Run the electrophoresis. Note that gels are typically run under 90-150V. The maximum voltage is indicated on the serial badge of each unit. Higher voltages allow for a faster electrophoresis but with poorer quality results.

COMPONENTS

1. ELFH-400-001

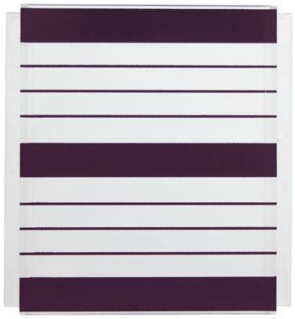

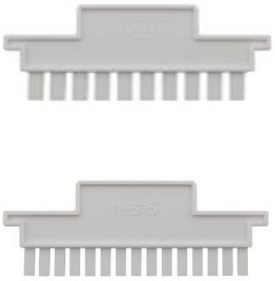

Each comb x4 (2 with 1mm wide and 2 with 2mm wide teeth)

2. ELFH-550-001

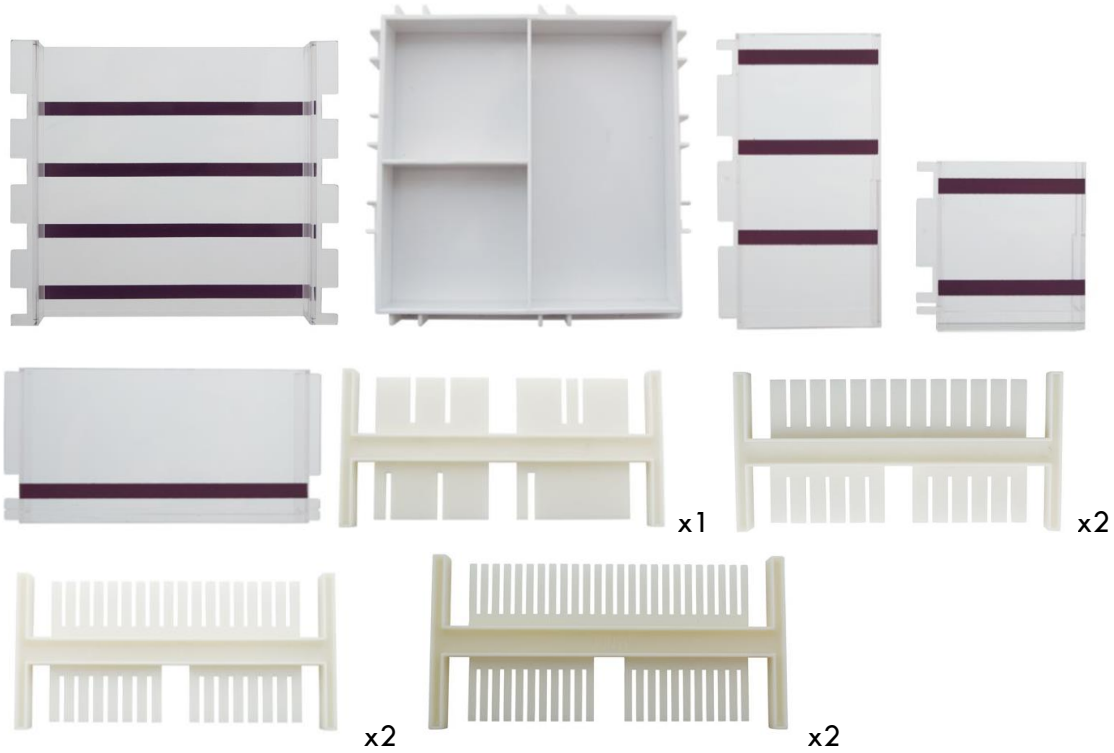

3. ELFH-1K8-001



Each comb x4 (2 with 1mm wide and 2 with 1,5mm wide teeth)

Comb sizes and specifications							
Model	Well	Teeth thickness (mm)	Teeth height (mm)	Teeth width (mm)	Max.Sample volume (µl)	Available for multi pipette	Quantity
ELFH-400-001	10 well	1	9	5,4	48,6		2
	15 well	1	9	3,2	28,8		2
	10 well	2	9	5,4	97,2		2
	15 well	2	9	3,2	57,6		2
ELFH-550-001	1 well	1,5	20	42	1260		1
	2 well	1,5	20	20	600		1
	3 well	1,5	20	17	510		1
	6 well	1	20	7	140	Yes	2
	13 well	1	20	7	140	Yes	2
	8 well	1	20	4,7	94		2
	18 well	1	20	4,7	94		2
	11 well	1	20	3,1	62	Yes	2
	25 well	1	20	3,1	62	Yes	2
ELFH-1K8-001	17 well	1	12	8	96		2
	22 well	1	12	6,5	78	Yes	2
	36 well	1	12	3,5	42		2
	44 well	1	12	3	36	Yes	2
	17 well	1,8	12	8	172,8		2
	22 well	1,8	12	6,5	140,4	Yes	2
	36 well	1,8	12	3,5	75,6		2
	44 well	1,8	12	3	64,8	Yes	2