Magnetic Hotplate-Stirrer with Timer



User Manual

MS-H-Pro^{T} Magnetic Hotplate-Stirrer with Timer

Please read the User Manual carefully before use, and follow all operating and safety instructions!
Technical specifications and outline are subject to change without prior notice.

ONiLAB

Contents

Preface 1
Service 1
Warranty 1
1 Safety Instructions 2
2 Proper Use 3
3 Inspection 4
3.1 Receiving Inspection 4
3.2 Listing of Items 4
4. Control 4
4.1 Control elements 4
4.2 Display 6
5 Trial Run 6
6 Function: Heating 7
6.1 Working with the PT1000 external temperature sensor 8
6.2 Residual heat warning（HOT） 8
7 Stirring 9
8 Timer 9
9 Remote Control 9
10 Faults 10
11 Maintenance and Cleaning 10
12 Associated Standards and Regulations 11
13 Specifications 12
14 Ordering Information 13

Preface

Welcome to the “Magnetic Hotplate-Stirrer with Timer User Manual”. Users should read this Manual carefully, follow the instructions and procedures, and be aware of all the cautions when using this instrument.

Service

When help needed, you can always contact the Service Department of manufacturer for technical support.

Please provide the customer care representative with the following information：

• Serial number（on the rear panel）
• Certification
• Description of problem (i.e., hardware or software)
• Methods and procedures adopted to resolve the problems
• Your contact information

Warranty

This instrument is warranted to be free from defects in materials and workmanship under normal use and service, for a period of 12 months from the date of invoice. The warranty is extended only to the original purchaser. It shall not apply to any product or parts which have been damaged on account of improper installation, improper connections, misuse, accident or abnormal conditions of operation.

For warranty claims please contact your local supplier. You may also send the instrument directly to manufacturer, enclosing the invoice copy and by giving reasons for the claim.

1 Safety Instructions

	Warning! • Read the operating instructions carefully before use. • Ensure that only trained staff work with the instrument.
	Risk of burn! • Caution when touch the housing parts and the hotplate which can reach temperature of 340℃. • Pay attention to the residual heat after switching off.
	Protective ground contact！ • Make sure that the electrical socket is grounded (protective ground contact) before use.

• When operating wear personal safety protection to avoid the risk from:

- Splashing and evaporation of liquids
- Release of toxic or combustible gases

• Use the instrument in a spacious area on a stable, clean, non-slip, dry and fireproof surface. Do not operate the instrument in explosive atmospheres, with hazardous substances or around water.

• Gradually increase the speed, reduce the speed if:

- Stirring bar breaks away due to high speed
- The instrument is not running smoothly, or the container is not centered on the plate

• Temperature must always be set to at least 50C lower than the flash point of the media used.

• Be aware of hazards due to:

- Flammable materials or media with a low boiling temperature
- Overfilling of media
- Unsafe container

• Process pathogenic materials only in closed vessels.

• If the case of the stirrer bar is PTFE, please note：

- Elemental fluorine, three fluoride and alkali metals will corrode the PTFE and Halogen alkanes make it expand at room temperature
- Molten alkali，alkaline earth metals or their solution, as well as the powder in second and third ethnic of the Periodic Table of Elements will have chemical reaction with PTFE when temperature reaches 300 ~ 400C .

• Check the instrument and accessories prior to each use. Do not use damaged components. Safe operation is only guaranteed with the accessories listed in the “Accessories” section. Accessories must be securely attached to the device and must be removed when not in use. Always disconnect the power before fitting accessories.

• When using the external temperature sensor, the tip of the measuring sensor must be at least 5-10mm from vessel’s bottom and wall.

• The instrument can only be fully disconnected from the main power supply by turning off the main or disconnecting the plug.

• The voltage stated on the label must correspond to the main power supply.

• Ensure that the main power supply cable does not touch the hotplate. Do not cover the device.

• The instrument must only be operated by adults.

• Keep away from high magnetic fields.

2 Proper Use

The instrument is designed for mixing and/or heating liquids in laboratories:

- Do not use more than 2000 meters above sea level
- Temperature between 0℃and 40℃
- Installation Type: Product is designed to connect the indoor outlet, where voltage fluctuation is not more than ±10% compared with normal.
- Observe the minimum distances between multiple units, and distances to the rear wall and above the assembly (min. 100 mm).

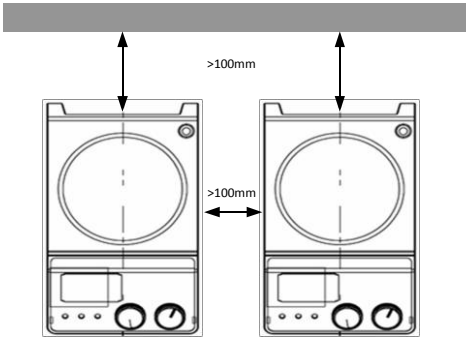

Figure 1

This device is not suitable for using in residential areas or other constraints mentioned in Chapter 1.

3 Inspection

3.1 Receiving Inspection

Unpack the equipment carefully and check for any damage which may have arisen during transport. Please contact manufacturer/supplier for technical support.

⚠	**Note:** If there is any apparent damage to the unit, do not attempt to operate.

3.2 Listing of Items

The package includes the following items:

Items	Qty
Main unit	1
Power cable	1
Stirrer bar	1
User Manual	1

Table 1

4. Control

4.1 Control elements

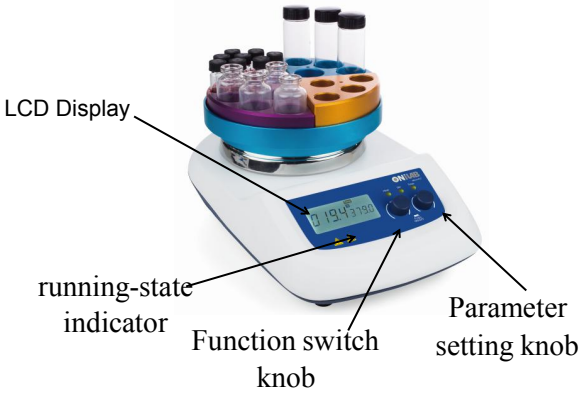

Figure 2

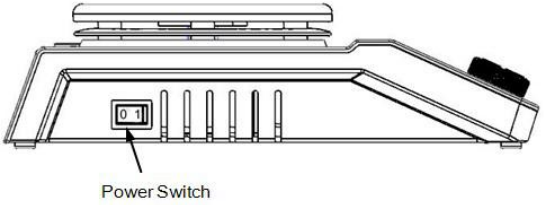

Figure 3

	Items	Descriptions
LCD Digital Hotplate Timer Magnetic Stirrer	Function switch knob	Turning the knob, switches the parameters setting interface, followed by Temperature setting, Speed setting, Timer setting, switching cycle. Pressing the knob turns the three setting options on/off.
	Parameter setting knob	At the parameter setting interface, set the parameter by turning the knob. Pressing the knob turns on the initializer.
	LCD display	LCD displays the real-time working state and all settings.
	Heating knob Heat	When the heating function is switched ON, the LED Heat is lit.
	Stirring knob Stir	When the stirring function is switched ON, the LED Stir is lit.
	Timer knob timer	When the timer function is switched ON, the LED Timer is lit.
	Power switch	Switch ON or OFF.

Table 2

4.2 Display

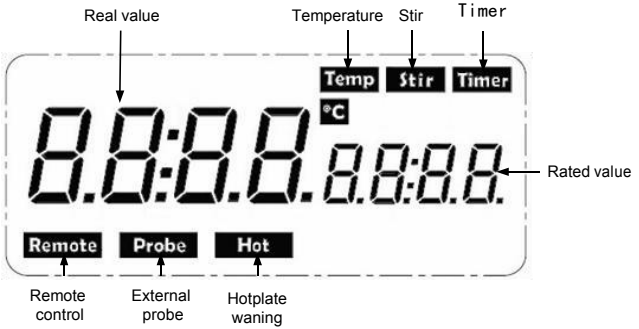

Figure 5

Characters	Descriptions
Temp & ℃	Displays temperature when the heating function is switched ON.
Stir	Displays stirring speed when the stirring function is switched ON.
Hot	Displays HOT warning if the plate temperature is above 50℃ after switching OFF the heating function.
Timer	Timer parameter when the timer function is switched ON.
Probe	Display when using external probe.
Remote	Display when using remote control.
Rated value/Real value	Display values in when heating or stirring or timer function is switched ON.

Table 3

Note:
If both heating and stirring functions have been started at the same time, heat display always has higher priority. If in this case speed is changed via the stirring knob, it displays stirring speed and reverts to temperature after 5 seconds.

5 Trial Run

- Make sure the required operated voltage and power supply voltage match.
- Ensure the socket is properly grounded.
- Plug in the power cable, ensure the power is on and begin initializing.
- Add the medium into the vessel with an appropriate

stirring bar.

- Place vessel on the work plate.
- Set the target stirring speed and begin.
- Observe the stirring bar and LCD display.
- Set the target temperature and start heating.
- Observe the real temperature on LCD display.
- Set the timer.
- Timer ends, the heating function stops.
- Stops stirrer function.

If these operations above are normal, the device is ready to operate. If these operations are not normal, the device may be damaged during transportation, please contact manufacturer/supplier for technical support.



Warning !

Do not remove the vessel when the instrument is operating.。

6 Function: Heating

The device is controlled by digital temperature control technology, which has two separate safety circuits. The hotplate is kept at a constant temperature by a digital control circuit. The hotplate temperature can also be controlled from a separate, adjustable safety circuit. The two temperature sensors (PT1000) internal for temperature control are built into the hotplate. The single external PT1000 can control the temperature of sample.

- Plug in the external PT1000.
- Set the temperature via rotating the temperature control knob slowly to the target value, press parameter set knob and switch on the heating function.
- When the heating function is switched on, the LED "Heat" will light up and the LCD will display the actual temperature.
- The set temperature will be displayed on the right-hand side of the LCD as well as Temp and ℃ characters.
- The heating function is switched on or off by pushing heating knob.

Instrument is turned on for the setting zone temperature setting when the last shutdown temperature, the common case, set the heating temperature display the actual temperature may have the following differences:

- Hotplate center and outer edge.

- The sample container and the container.

In order to ensure the accuracy of the liquid temperature inside the container, please use the PT1000 external temperature sensor.

6.1 Working with the PT1000 external temperature sensor



Figure 6

The PT1000 external temperature sensor is the manufacturer's optional accessory. If the sensor is plugged in, "Probe" will be shown on the digital display to indicate the sensor is operating. The setting value of external temperature sensors and actual temperature are displayed. The safety circuit controls hotplate temperature.

Comparing with the temperature control of the hotplate, the external temperature sensor can control the medium's temperature more precisely. The external temperature sensor must be put in sample container, if detect anomalies, heating will automatically shut down. Please do the following at this time:

- Turn off the power
- Ensure the external temperature sensor is positioned sample container correctly
- Turn on the power, set the target temperature and switch on the heating function
- If the unit is still not functioning correctly, please contact manufacturer/supplier

6.2 Residual heat warning（HOT）

In order to help prevent the risk of burns from the hotplate, this instrument has a residual heat warning function. When the heating function is switched off (and the power cord is still plugged in) and the heating plate temperature is still above 50°C, "Hot" will flash to warn that it is unsafe to touch.. When the hotplate temperature drops to below 50℃, the display will automatically switch off. To completely

turn off the unit, pull out the plug. When the plug is pulled out, the residual heat warning function will not function.

7 Stirring

The “stirring” function is switched on or off via rotating stirring knob. The speed is set on the knob (100 to 1500 rpm in steps of 10 rpm). When both the heating function and stirring are switched on and the above operations are completed, the LCD will shift to the speed value and revert back to the temperature value in about 5 seconds.
The last speed value set is displayed.

8 Timer

Turn the Function switch knob to time set interface, turn the parameter set knob to target time, press parameter set knob, to switch on timer function.

Attention: The heating and stirring function can be switched on at the same time only when setting the timer function. Otherwise, only the stirring function can be switched on.

9 Remote Control

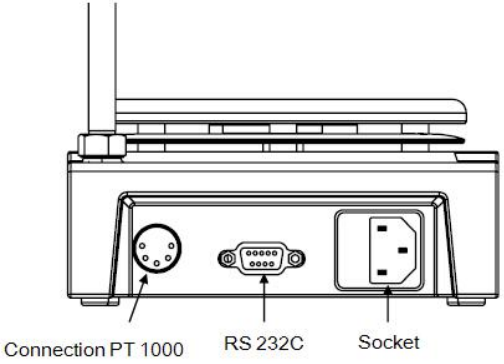

Figure 7

The unit can be controlled from an external PC (using the third-party software) via the RS232C serial interface fitted to the unit. Data communication from laboratory instrument to computer is only possible on demand of the computer.

- The functions of the interface lines between laboratory instrument and automation system are selected from the specified signals of the EIA-standard RS232C, corresponding with DIN66020 Part 1. The allotment of the bushing can be taken from Figure 7.

- Transmission method: Asynchronous signal transmission in start-stop-operation.
- Mode of transmission: Fully Duplex. 1 start bit; 7 character bits; 1 parity bit [straight (even)); 1 stop bit
- Transmission speed: 9600 bit/s



Note:
Forbid to insert or remove the RS232C communication line when switch on!

10 Faults

- Instruments can't be powered ON
  - Check whether the power line is unplugged
  - Check whether the fuse is broken or loose
- Fault in power during self-test
  - Switch OFF the unit, then switch ON and reset the instruments to factory default setting.
- Stir speed cannot reach set point
  - Excessive medium viscosity may cause abnormal speed reduction of the motor
- Unit cannot be powered off when switched off.
  - Check if the residual heat warning function is still ON and hotplate temperature is above 50℃ (the LCD still work and "Hot" flash).

If these faults are not resolved, please contact manufacturer/supplier.

11 Maintenance and Cleaning

Correct usage and maintenance of the equipment can extend the service life of equipment. Please keep the instrument dry and clean, quickly remove and overflowing liquid, use non-abrasive cleaner to clean up the outer surface, please do not connect with the power supply if wet. If wet solids or liquid enter into the instrument, please disconnect the power supply and do not use, contact the manufacturer/supplier for more advice.

- Do not use a spray cleanser on the instrument when cleaning.
- Unplug the power cord when cleaning.
- Only use recommended cleansers:

Dyes	Isopropyl alcohol
Construction materials	Water containing surfactant / Isopropyl alcohol
Cosmetics	Water containing surfactant /

	Isopropyl alcohol
Foodstuffs	Water containing surfactant
Fuels	Water containing surfactant

- Before using other method for cleaning or decontamination, the user must ascertain with the manufacturer that this method will not harm the instrument. Wear the proper protective gloves during cleaning of the instrument.

12 Associated Standards and Regulations

Construction in accordance with the following safety standards:
EN 61010-1
UL 3101-1
CAN/CSA C22.2(1010-1)
EN 61010-2-10
Construction in accordance with the following EMC standards:
EN 61326-1

Associated EU guidelines:
EMC-guidelines: 89/336/EWG
Instrument guidelines: 73/023/EWG



Note:

- Electronic equipment cannot cleaned with a detergent cleaner.
- Repairing equipment must be cleaned and avoid the contamination of dangerous substances, put the equipment into original package box and returned.
- When the equipment hasn't been used for long time, please leave it in power-off condition at dry, clean,room temperature, stable environment.

13 Specifications

Items	Digital model
Voltage [VAC]	200-240 / 100-120
Frequency [Hz]	50 / 60
Power [W]	550
Stirring point position quantity	1
Max. stirring quantity (H_2O) [L]	20
Max. magnetic bar [L×Ø, mm]	80×10
Motor type	Brushless DC motor
Max. power input of motor [W]	18
Max. power output of motor [W]	10
Speed range [rpm]	100-1500
Rotary speed display	LCD
Plate material	Stainless Steel with ceramic coated
Dimensions of workplate (mm)	Ø 135
Heating power [W]	500
Temperature range [℃]	Room temperature - 340, Step:1
Temperature display [℃]	LCD
Temperature display accuracy [℃]	±0.1
The safety temperature of the hotplate [℃]	360
Temperature sensor in medium	PT1000
Control accuracy of heating temperature with temperature sensor [℃]	±0.2
Residual heat warning	50℃
Set time limits	1min-99h 59min
Dimensions [WxDxH ,mm]	280x160x85
Weight [kg]	2.8
Permitted ambient temperature [℃]	5 – 40
Permitted relative humidity	80%
Protection class acc. to DIN 60529	IP42
RS232 interface	Yes

Table 4

14 Ordering Information

Accessories	
18900016	PT1000-A Temperature sensor for digital

Cat No.	Descriptions
	hotplate model, length of 230mm
18900136	PT1000-B Glass coated temperature sensor for digital hotplate model, length of 230mm

Cat No.	Descriptions
18900080	Reaction block for 50ml round bottom flask(one flask capacity)
18900081	Reaction block for 100ml round bottom flask(one flask capacity)
18900082	Reaction block for 250ml round bottom flask(one flask capacity)
18900083	Reaction block for 500ml round bottom flask(one flask capacity)
18900006	Stirrer bar（10mm x 6mm）, 1pc/pk
18900007	Stirrer bar（15mm x 8mm）, 1pc/pk
18900008	Stirrer bar（20mm x 8mm）, 1pc/pk
18900009	Stirrer bar（25mm x 8mm）, 1pc/pk
12500005	Stirrer bar（30mm x 6mm）, 1pc/pk
18900011	Stirrer bar（40mm x 8mm）, 1pc/pk
12500004	Stirrer bar（50mm x 8mm）, 1pc/pk
18900013	Stirrer bar（65mm x 8mm）, 1pc/pk
18900014	Stirrer bar（80mm x 13mm）, 1pc/pk
18900015	Stirrer bar remover，1pc/pk
18900018	F100 protective cover for non-hotplate model
18900019	F101 protective cover for hotplate model



ONiLAB LLC.

Add:775 Rivera St， Riverside CA 92501，USA

Tel: +1-424-248-3580

www.onilabsci.com