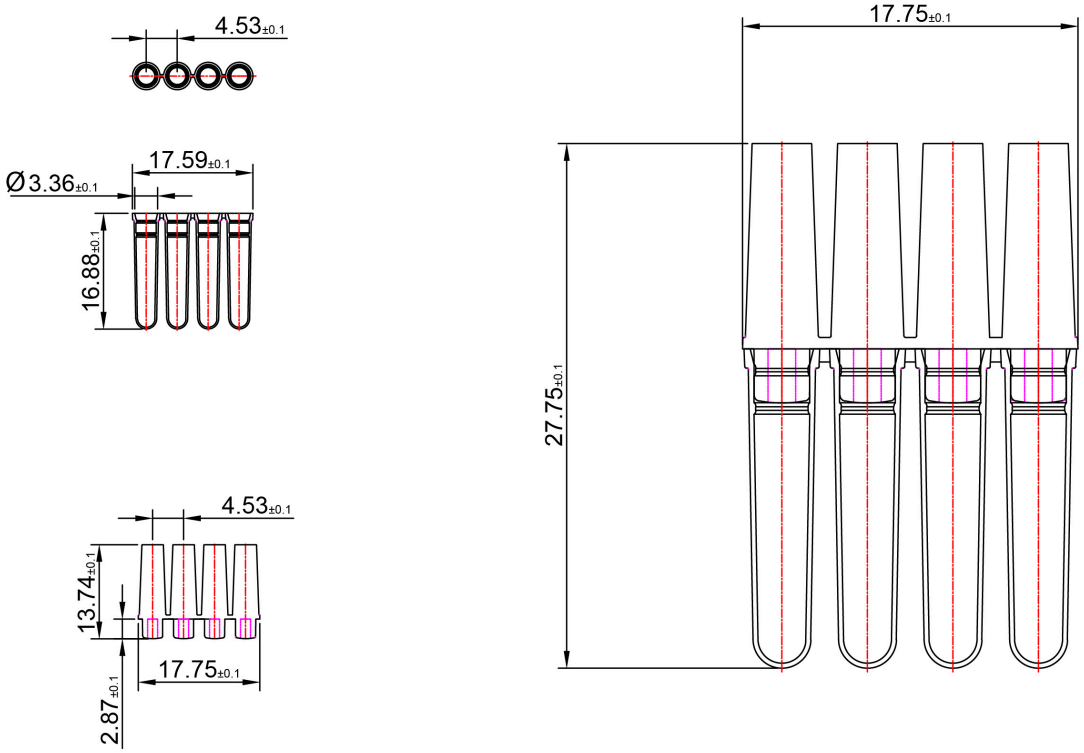

qPCR 8-TUBE STRIPS

PCRS-QR4-252

astik'S

Date: 08-03-2023

Material: Polypropylene USP VI
Colour: Natural, transparent
Capacity: <0,1 ml
Features: Caps included, separately. Compatible with Rotor-Gene Q.
Human DNA free and certified DNase, RNase, and PCR inhibitors free